COMMERCIAL STANDARD **CS106-57**

Supersedes CS106-44

Boys' Pajama Size Measurements

(Woven Fabrics)

A recorded voluntary standard of the trade published by the U. S. Department of Commerce

For sale by the Superintendent of Documents
U. S. Government Printing Office, Washington 25, D. C. Price 10 cents

U. S. DEPARTMENT OF COMMERCE

SINCLAIR WEEKS, Secretary

Issued by

OFFICE OF TECHNICAL SERVICES

Commodity Standards Division

With the cooperation of

NATIONAL BUREAU OF STANDARDS

COMMERCIAL STANDARDS

Commercial Standards are developed by manufacturers, distributors, and users in cooperation with the Commodity Standards Division of the Office of Technical Services, and with the National Bureau of Standards. Their purpose is to establish quality criteria, standard methods of test, rating, certification, and labeling of manufactured commodities, and to provide uniform bases for fair competition.

The adoption and use of a Commercial Standard is voluntary. However, when reference to a Commercial Standard is made in contracts, labels, invoices, or advertising literature, the provisions of the standard are enforcible through usual legal channels as a part of the sales contract.

Commecial Standards originate with the proponent industry. The sponsors may be manufacturers, distributors, or users of the specific product. One of these three elements of industry submits to the Commodity Standards Division the necessary data to be used as the basis for developing a standard of practice. The division, by means of assembled conferences or letter referenda, or both, assists the sponsor group in arriving at a tentative standard of practice and thereafter refers it to the other elements of the same industry for approval or for constructive criticism that will be helpful in making any necessary adjustments. The regular procedure of the division assures continuous servicing of each Commercial Standard, through review and revision, whenever, in the opinion of the industry, changing conditions warrant such action.

SIMPLIFIED PRACTICE RECOMMENDATIONS

Under a similar procedure the Commodity Standards Division cooperates with industries in the establishment of Simplified Practice Recommendations. Their purpose is to eliminate avoidable waste through the establishment of standards of practice for sizes, dimensions, varieties, or other characteristics of specific products; to simplify packaging practice; and to establish simplified methods of performing specific tasks.

The initial printing of Commercial Standard CS106-57 was made possible through the cooperation of the Boys' Apparel Buyers' Association, Inc.

Boys' Pajama Size Measurements

(Woven Fabrics)

(Third Edition)

[Effective From Beginning of 1957 Fall Production]

NOTE.—The measurements of the pajamas are based on actual try-ons of pajamas on boys whose body measurements conformed to those in Commercial Standard CS155-50, Body Measurements for the Sizing of Boys' Apparel, previously adopted by the boys' sport and dress shirt, woven shorts, knit underwear, trouser, and sports-outerwear segments of the boys' apparel industry.

1. PURPOSE

1.1 The primary purpose of this Commercial Standard is to provide standard methods of measuring and standard size measurements for boys' pajamas.

1.2 Another purpose is to base the garment measurements for size on a system of standard body measurements that can be presented to the consumer as a guide in determining apparel size and that will be uniform for boys' garments of all types.

2. SCOPE

2.1 This standard covers methods of measuring, size designations, and length and girth measurements of boys' pajamas in sizes 4 to 20.

3. APPLICATION

3.1 The methods and measurements given in this standard are applicable to finished garments as delivered by the manufacturer.

4. GENERAL REQUIREMENTS

4.1 *Method of measuring.*—The garment shall be laid out on a smooth flat surface in such a way that creases or wrinkles will not affect the measurements.

4.1.1 *Precision.*—Measurements shall be taken to the nearest one-fourth inch.

5. STANDARD METHODS OF MEASURING AND MEASUREMENTS

5.1 *Pajama coat.*—See table 1 for measurements.

5.1.1 *Chest circumference (garment closed).*—Measure the distance across the garment 1 inch below the bottom of the armhole. (C, fig.1.) The circumference will be twice this measurement.

5.1.2 *Cross-back width.*—Measure across the back from armhole to armhole at one-half the depth of the armhole. (BW, fig. 2.)

5.1.3 *Armhole circumference.*—Measure the length of the armhole taken along the seam. (A, fig. 1.) The circumference will be twice this measurement.

5.1.4 *Sleeve length.*—Determine and mark or crease the center back of the garment at the neck. Measure from that center back point in

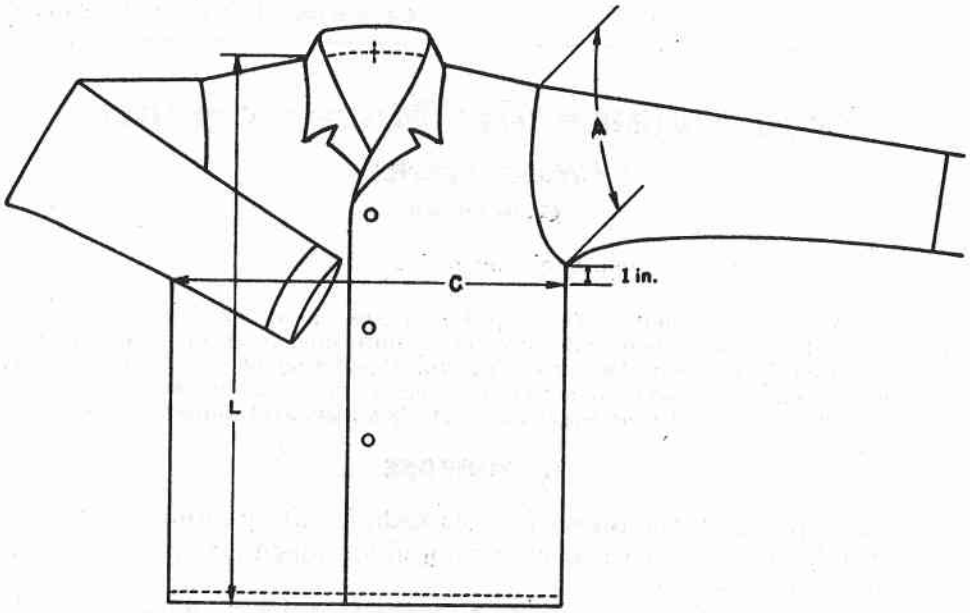

FIGURE 1.

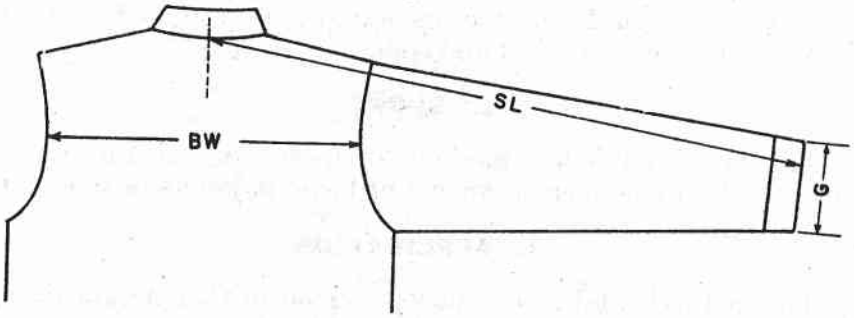

FIGURE 2.

a straight line across the top of the shoulder to the end of the sleeve at its upper edge. (SL, fig. 2.)

5.1.5 *Sleeve circumference at bottom.*—Measure the distance across the bottom of the sleeve. (G, fig. 2.) The circumference will be twice this measurement.

5.1.6 *Length (garment closed).*—Measure from the intersection of the shoulder seam and the neck edge to the bottom of the garment. (L, fig. 1.) (The position of the shoulder seam is assumed to be the normal one on the shoulder—not moved forward or backward.)

5.2 *Pajama pants.*—See table 1 for measurements.

5.2.1 *Waist.*

(a) *Elastic insert, flat.*—With waistband closed and the elastic relaxed, spread the garment flat and measure the distance between the outside edges of the waistband at the top. (W_1, fig. 3.) The circumference will be twice this measurement.

(b) *Elastic insert, stretched.*—With elastic stretched to the full width of the fabric encasing the elastic, measure the distance between the outside edges of waistband at the top. (W_2, fig. 3.) The circumference will be twice this measurement.

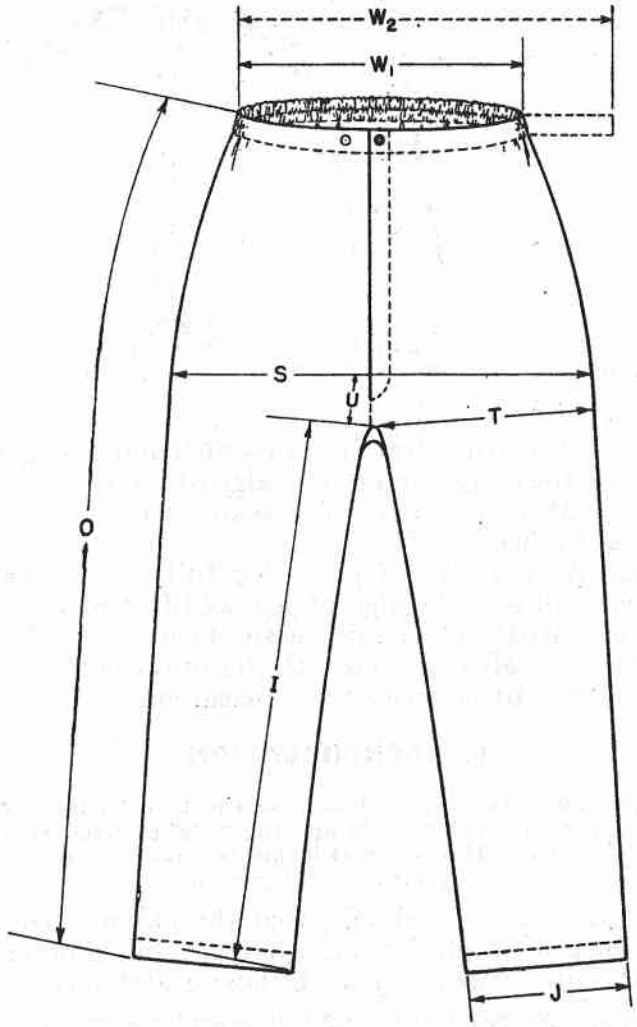

FIGURE 3.

(c) *All-around elastic, flat and stretched.*—Follow instructions for elastic insert (a) and (b) of this paragraph.

(d) *Drawstring.*—With pants pulled out to the full width of the fabric encasing the drawstring, measure the distance between the outside edges of the waistband at the top. (W_3, fig. 4.) The circumference will be twice this measurement.

5.2.2 *Seat.*—With fly centered as illustrated, with upper edges of front and back waistbands together, with seat material pulled down; measure first, up front rise the distance above crotch seam indicated in parentheses in table 1. (U, fig. 3.) At that point measure the distance straight across the pants, with the back-seat fullness pulled out. (S, fig. 3.) (The general direction should be parallel with the waistline of the garment.) The circumference will be twice this measurement.

5.2.3 *Front rise.*—Measure from the crotch seam, up along the edge of the fly, to the top of the waistband. (FR, fig. 5.)

5.2.4 *Back rise.*—Measure from the *same* crotch seam, up the back seam of the pants, to the top of the waistband. (BR, fig. 5.)

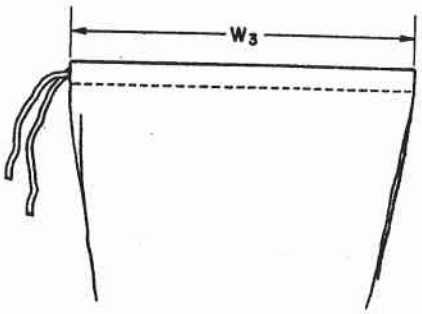

FIGURE 4.

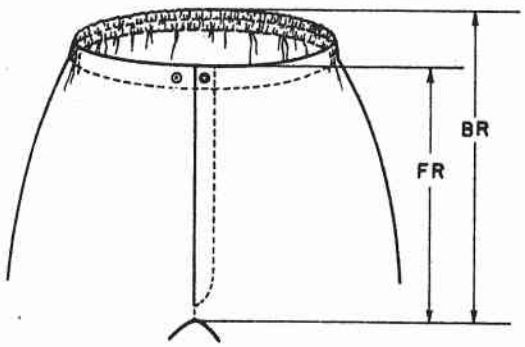

FIGURE 5.

5.2.5 *Outseam.*—Measure from top of waistband, along folded side edge of pants, as illustrated, to bottom edge of pants leg. (O, fig. 3.)

5.2.6 *Inseam.*—Measure from crotch seam of pants to bottom edge of pants leg. (I, fig. 3.).

5.2.7 *Thigh.*—With width of pants leg fully pulled out, measure from crotch seam to outside edge of leg, as illustrated. (T, fig. 3.) The circumference will be twice this measurement.

5.2.8 *Leg bottom.*—Measure across the leg at the bottom. (J, fig. 3.) The circumference will be twice this measurement.

6. IDENTIFICATION

NOTE.—This pajamas standard is based on the new "height-weight" sizing system for boys' apparel. The heights and the weights given identify the boy with his normal body size. If a boy is 54 inches tall and weighs 73 pounds, he is a size 10 boy and would normally buy a size 10 garment.

6.1 In order to assure purchasers that the pajamas they buy conform to this "height-weight" sizing system, it is recommended that catalog and sales literature carry the following statement:

> Sizes of these boys' pajamas are made in accordance with Commercial Standard CS106–57, as developed by the trade under the procedure of the Commodity Standards Division, and issued by the U. S. Department of Commerce.

6.2 For stickers, tags, hangers, or other labels, a shortened form for the above can be used:

Size _____, CS106–57,
Height _____ Weight _____ Chest _____

7. EFFECTIVE DATE

7.1 Having met the procedural requirements of the Commodity Standards Division, including approval by the acceptors hereinafter listed, this Commercial Standard was issued by the United States Department of Commerce, effective from the beginning of the 1957 fall production of boys' pajamas.

EDWIN W. ELY,
Chief, Commodity Standards Division.

TABLE 1. *Standard body measurements of boys, and garment measurements for boys' pajamas*

MEASUREMENT	SIZE (Number)									TOLERANCE (Inch)
	4	6	8	10	12	14	16	18	20	
CS155-50 BODY MEASUREMENTS										
Height of boy ... in	40	46	50	54	58	61	64	66	68	-
Weight of boy ... (approx.) lb	38	49	59	73	87	100	115	126	138	-
Chest of boy ... in	23	25	26½	28	29½	31½	33	34½	36	-
Waist of boy ... in	21½	22½	23½	24½	25½	26½	27½	28½	29½	-
Hip of boy ... in	23½	25½	27	29	30½	32½	34	35½	37	-
GARMENT MEASUREMENTS [1] (Inches)										
COAT										
Chest circumference ... (C)	29	31	33	35	37	39	41	43	45	±¾
Armhole circumference ... (A)	12½	13½	14½	15½	16½	17½	18¼	19	19¾	±½
Cross-back width ... (BW)	11½	12¼	13	13¾	14½	15¼	15¾	16¼	16¾	±¼
Sleeve length ... (SL)	18½	21	23	25	27	29	31	32	33	±½
Sleeve circumference at bottom ... (G)	9½	9¾	10	10¼	10½	10¾	11	11¼	11½	±½
Length ... (L)	18	19½	21	22½	24	25½	27	28	29	±½
PANTS										
Waist circumference:										
Elastic insert, flat ... (W_1)	19	20	21	22	23	24	25	26	27	±¾
Elastic insert, stretched ... (W_2)	27½	28½	29½	30½	31½	32½	33½	34½	35½	±1
All-around elastic, flat ... (W_1)	17	18	19	20	21	22	23	24	25	±¾
All-around elastic, stretched ... (W_2)	25	27	29	31	33	35	36½	38	39½	±1
Drawstring type, flat ... (W_3)	27	29	31	33	34½	36½	38½	40	41	±1
Seat circumference ... (S)	33	35	37	39	40½	42½	44½	46	47	±¾
(Measured at distance above crotch seam) ... (U)	(2½)	(2½)	(2½)	(2½)	(3)	(3)	(3)	(3½)	(3½)	-
Front rise ... (FR)	10½	11	11½	12	12½	13	13½	14	14½	±½
Back rise ... (BR)	12½	13	13½	14¼	15	15¾	16½	17¼	18	±½
Outseam ... (O)	23½	27½	30½	33½	36½	38½	40	41½	43	±½
Leg bottom ... (J)	15	15½	16	16½	17	17½	18	18½	18½	±½
Inseam ... (I)	14½	18	20½	23	25½	27	28	29	30	±½
Thigh ... (T)	19½	20½	21½	22½	23¼	24¼	25¼	26	26¾	±½

[1] Pajamas made to these measurements will fit boys of the body measurements specified in CS155-50. They allow for a shrinkage of not more than 1 percent. For non-preshrunk fabrics, additional compensating allowances must be made.

HISTORY OF PROJECT

First edition.—On November 27, 1942, the Office of Price Administration requested the cooperation of the National Bureau of Standards in the establishment of an emergency standard for boys' pajamas. A draft was developed, revised in the light of trade comment, and circulated for acceptance. On February 3, 1943, the volume of acceptances on file had reached a satisfactory majority, whereupon the standard was promulgated as CS(E)106–43, and made effective April 10, 1943.

Second edition.—On July 18, 1944, the standing committee recommended that size measurements for boys' junior pajamas be added to the standard, and that the word "emergency" be deleted. Upon general acceptance by the trade, the recommended revision was promulgated as CS106–44, effective from December 9, 1944.

Third edition.—On June 9, 1952, a formal request was received from the Boys' Apparel & Accessories Manufacturers' Association, Inc., to revise CS106–44, and to base the revision on the "height-weight" system of body-measurement sizing, Commercial Standard CS155–50, which had been used as the basis for sizing boys' shirts, shorts, trousers, and sports-outerwear. The National Association of Shirt, Pajama & Sportswear Manufacturers and the Boys' Apparel Buyers' Association joined with the above-mentioned association in completing work on the revision. The principal change from the previous edition is the adoption of a single scale of sizes from 4 to 20, without overlap and duplication.

The proposed standard was revised in the light of trade comment and was sent out for acceptance on October 8, 1956. Sufficient acceptances were received to warrant promulgation of the revised standard as CS106–57. It became effective from the beginning of the 1957 fall production of boys' pajamas.

Project Manager: Mansfield Lonie, Commodity Standards Division, Office of Technical Services.

Technical Adviser: Mrs. Lola S. Deming, Statistical Engineering Laboratory, National Bureau of Standards.

STANDING COMMITTEE

The following individuals comprise the membership of the standing committee organized by the industry, which is to review, prior to circulation for acceptance, revisions proposed to keep the standard abreast of progress. Comments concerning the standard and suggestions for revision may be addressed to any member of the committee or to the Commodity Standards Division, Office of Technical Services, U. S. Department of Commerce, which acts as secretary for the committee.

Manufacturers:

LEO ALPERSON, Weldon Manufacturing Corp., 350 Fifth Ave., New York 1, N. Y. (Chairman).

DAVID JABLOW, I. Jablow & Co., 1107 Broadway, New York, N. Y.

MAX LOVELL, National Association of Shirt, Pajama & Sportswear Manufacturers, 112 West 34th St., New York 1, N. Y.

BERNARD MONCHARSH, Sleepwear, Inc., 204 Fifth Ave., New York, N. Y.

HENRY PEARLMAN, Nitekraft Corp., 350 Fifth Ave., New York, N. Y.

MORTON SAVADA, Savada Bros., 1115 Broadway, New York, N. Y.

DAVID ZALL, Reliance Manufacturing Co., 350 Fifth Ave., New York 1, N. Y.

Distributors:

HARRY GILMAN, Abraham & Straus, Brooklyn, N. Y. (representing Boys' Apparel Buyers' Association).

WILLIAM BURSTON, National Retail Dry Goods Association, Merchandising Division, 100 West 31st St., New York, N. Y.

OSCAR KARREL, Lord & Taylor, 424 Fifth Ave., New York 18, N. Y. (representing Boys' Apparel Buyers' Association).

HERBERT W. KLATSKY, Consolidated Clothiers, 175 Fifth Ave., New York 10, N. Y. (representing Boys' Apparel Buyers' Association).

HENRY MOSKOWITZ, Gimbel Bros., New York, N. Y. (representing Boys' Apparel Buyers' Association).

LEE K. POND, Spiegel Inc., 1061 West 35th St., Chicago, Ill. (representing Mail Order Association of America).

LOUIS ROTHSCHILD, National Association of Retail Clothiers & Furnishers, 1007 Munsey Bldg., Washington, D. C.

SAUL ZEIDMAN, Allied Stores Purchasing Corp., 401 Fifth Ave., New York, N. Y. (representing Boys' Apparel Buyers' Association).

Consumers:

GEORGE H. JOHNSON, American Institute of Laundering, Joliet, Ill.

MRS. MARGARET H. KINGSBURY, Procurement Section, Branch of Property & Supplies, Bureau of Indian Affairs, U. S. Department of Interior, Washington 25, D. C.

MISS FAY MITCHELL, University of Maryland, College Park, Md. (representing American Home Economics Association).

LOUIS S. POTSDAMER, Merchandise Research Laboratories, Gimbel Bldg., Philadelphia, Pa.

MRS. A. N. SATTERLEE, Standards Committee, General Federation of Women's Clubs, 4901 Second Ave., South, Minneapolis 9, Minn.

DR. DOROTHY STEPAT, Hunter College, 695 Park Ave., New York, N. Y. (representing National Council of Women of the U. S., Inc.).

ACCEPTANCE OF COMMERCIAL STANDARD

If acceptance has not previously been filed, this sheet properly filled in, signed, and returned will provide for the recording of your organization as an acceptor of this Commercial Standard.

Date _____

Commodity Standards Division
Office of Technical Services
U. S. Department of Commerce
Washington 25, D. C.

Gentlemen:

We believe that Commercial Standard CS106–57 (together with the body measurement standard CS155–50, on which CS106–57 is based), constitutes a useful standard of practice, and we individually plan to utilize it as far as practicable in the

production [1] distribution [1] purchase [1]

of boys' pajamas (made from woven fabrics).

We reserve the right to depart from the standard as we deem advisable.

We understand, of course, that only those products which actually comply with the standard in all respects can be identified or labeled as conforming thereto.

(Cut on this line)

Signature of authorized officer_____
(In ink)

(Kindly typewrite or print the following lines)

Name and title of above officer_____

Organization_____
(Fill in exactly as it should be listed)

Street Address_____

City, zone, and State_____

[1] Underscore the one that applies. Please see that separate acceptances are filed for all subsidiary companies and affiliates which should be listed separately as acceptors. In the case of related interests, trade associations, trade papers, etc., desiring to record their general support, the words "General Support" should be added after the signature.

TO THE ACCEPTOR

The following statements answer the usual questions arising in connection with the acceptance and its significance:

1. *Enforcement.*—Commercial Standards are commodity specifications voluntarily established by mutual consent of those concerned. They present a common basis of understanding between the producer, distributor, and consumer and should not be confused with any plan of governmental regulation or control. The United States Department of Commerce has no regulatory power in the enforcement of their provisions, but since they represent the will of the interested groups as a whole, their provisions through usage soon become established as trade customs, and are made effective through incorporation into sales contracts by means of labels, invoices, and the like.

2. *The acceptor's responsibility.*—The purpose of Commercial Standards is to establish, for specific commodities, nationally recognized grades or consumer criteria, and the benefits therefrom will be measurable in direct proportion to their general recognition and actual use. Instances will occur when it may be necessary to deviate from the standard and the signing of an acceptance does not preclude such departures; however, such signature indicates an intention to follow the standard, where practicable, in the production, distribution, or consumption of the article in question.

3. *The Department's responsibility.*—The major function performed by the Department of Commerce in the voluntary establishment of Commercial Standards on a nationwide basis is fourfold: first, to act as an unbiased coordinator to bring all interested parties together for the mutually satisfactory adjustment of trade standards; second, to supply such assistance and advise as past experience with similar programs may suggest; third, to canvass and record the extent of acceptance and adherence to the standard on the part of producers, distributors, and users; and fourth, after acceptance, to publish and promulgate the standard for the information and guidance of buyers and sellers of the commodity.

4. *Announcement and promulgation.*—When the standard has been endorsed by a satisfactory majority of production or consumption in the absence of active valid opposition, the success of the project is announced. If, however, in the opinion of the standing committee or of the Department of Commerce, the support of any standard is inadequate, the right is reserved to withhold promulgation and publication.

ACCEPTORS

The organizations listed below have individually accepted this standard for use as far as practicable in the production, distribution, or use of boys' pajamas (made from woven fabrics). In accepting the standard they reserved the right to depart from it as they individually deem advisable. It is expected that articles which actually comply with the requirements of this standard in all respects will be regularly identified or labeled as conforming thereto, and that purchasers will require such specific evidence of conformity.

ASSOCIATIONS

(General Support)

American Institute of Laundering, Joliet, Ill.
Boys' Apparel Buyers' Association, Inc., New York, N. Y.
National Association of Retail Clothiers & Furnishers, Washington, D. C.
National Association of Shirt, Pajama & Sportswear Manufacturers, New York, N. Y.
National Council of Women of the U. S., New York, N. Y.

FIRMS AND OTHER INTERESTS

Adelson's Boys' Shop, Rockville Centre, N. Y.
Alden's, Inc., Chicago, Ill.
Anson Pajama Co., Bronx, New York, N. Y.
Arkwright, Inc., New York, N. Y.
Bean, C. W., & Son, Pacolet, S. C.
Brills, Milwaukee, Wis.
Bronson's, Montgomery, Ala.
Burdine's, Miami, Fla.
California, University of, Agricultural Extension Service, Berkeley, Calif.
Cambridge Pajama Co., Inc., New York, N. Y.
Cavendish Trading Corp., New York, N. Y.
D'Arcy's Children's Wear, Indianapolis, Ind.
Davis, E. G., & Sons Co., Inc., Henderson, N. C.
Elder Manufacturing Co., St. Louis, Mo.
Father & Son Apparel Shops, Inc., Baltimore, Md.
Fields Wearing Apparel, Newark, N. J.
Frackville Pajamas, Inc., New York, N. Y.
Grant, W. T., Co., New York, N. Y.
Gutman, Julius, & Co., Baltimore, Md.
Halle Bros. Co., Cleveland, Ohio
Hammel, L., Dry Goods Co., Mobile, Ala.
Harwood Manufacturing Corp., New York, N. Y.
Hatch Textile Research, Inc., New York, N. Y.
Industrial By-Products & Research Co., Philadelphia, Pa.
Isaacson, L., & Sons, New York, N. Y.
Ivey, J. B., & Co., Charlotte, N. C.
Jablow, I., & Co., Inc., New York, N. Y.
Kann, S., Sons Co., Washington, D. C.
Kansas, State of, Purchasing Division, Topeka, Kans.
Kansas State College, Department of Clothing and Textiles, Manhattan, Kans.
Kaufmann's Department Store, Pittsburgh, Pa.
Kaynee Co., Cleveland, Ohio
Kay's Lads & Dads, Washington, D. C.
Kones, I., & Son, Inc., New York, N. Y.
Kugelman's Woodsville, N. H.
Kurtz, David, Co., Inc., New York, N. Y.
Levy Bros. Inc., Louisville, Ky.
Little Manufacturing Co., Greenville, Ala.
Macy, R. H., & Co., Inc., New York, N. Y.
Mamyie Bros., New York, N. Y.
Merchandise Research Laboratories, Philadelphia, Pa.
Metasco, Inc., New York, N. Y.
Milsan Mills, Inc., Lebanon, Pa.
Monroe, Day, Topeka, Kans.
Munsingwear, Inc., Minneapolis, Minn.
Myerson's Stores, Inc., Tucson, Ariz.
Nitekraft Corp., New York, N. Y.
Noggle, Wm. H. & Sons, Inc., Manheim, Pa.
Owl Nitewear Co., New York, N. Y.
Pajama-Craft Inc., New York, N. Y.
Penney, J. C., Co., Inc., New York, N. Y.
Polskys, Akron, Ohio
Prep Shop, Inc., Cambridge, Mass.
Publix Shirt Corp., New York, N. Y.
R & J Manufacturing Co., Inc., New London, Conn.
Reliance Manufacturing Co., New York, N. Y.
Rob Roy Co., Inc., New York, N. Y.
Roshek Bros., Co., Dubuque, Iowa
Sample, Inc., Buffalo, N. Y.
Sanger Brothers Department Store, Dallas, Tex.
Savada Bros., Inc., New York, N. Y.
Sleepwear, Inc., New York, N. Y.
South Dakota State College, Experiment Station, Brookings, S. Dak.
Spiegel, Inc., Chicago, Ill.
Steckler's, Ashland, Ky.
Steiger, Albert, Co., Springfield, Mass.
Stewart Dry Goods Co., Louisville, Ky.
Stith, Frank A., Co., Inc., Winston-Salem, N. C.
Student Shop, Inc., Stamford, Conn.
Tam O'Shanter, Inc., Manchester, N. H.
Tennessee, University of, College of Home Economics, Department of Textiles & Clothing, Knoxville, Tenn.
Tom and Jerry Boyswear, Inc., New York, N. Y.
"Town-Girl" Wear Ltd., Montreal, Quebec, Canada.
Wahlcraft Manufacturing Corp., New York, N. Y.
Weldon Manufacturing Corp., New York, N. Y.
Wilson Bros., South Bend, Ind.
Wings Boyswear, Inc., New York, N. Y.
Woodward & Lothrop, Washington, D. C.
Y. F. G., Inc. (Youth Fashion Guild), New York, N. Y.

UNITED STATES GOVERNMENT

Bureau of Indian Affairs, Branch of Property & Supply, Washington, D. C.

OTHER COMMERCIAL STANDARDS

A list of Commercial Standards may be obtained from the Commodity Standards Division, Office of Technical Services, U. S. Department of Commerce, Washington 25, D. C. This list contains the purchase price of each publication and directions for ordering copies.

U. S. GOVERNMENT PRINTING OFFICE: 1958

CS106-57

FEDERAL REGISTER

DEPARTMENT OF COMMERCE

National Bureau of Standards

VOLUNTARY PRODUCT STANDARDS

Notice of Action on Proposed Withdrawal

In accordance with the provisions of § 10.12 of the Department's published "Procedures for the Development of Voluntary Product Standards" (15 CFR Part 10, as amended; 35 F.R. 8349 dated May 28, 1970), notice is hereby given of the withdrawal of the 36 commerical standards (CS) and 25 simplified practice recommendations (SPR) identified below. Each of these standards has been found to be obsolete, no longer technically adequate, no longer generally acceptable to and used by the industry, inconsistent with established policy, or otherwise inappropriate, and revision is not feasible or would serve no useful purpose.

CS 14-51 Boys' sport and dress shirt (woven fabrics) size measurements.
CS 33-43 Knit underwear (exclusive of rayon).
CS 56-60 Strip oak flooring.
CS 70-41 Phenolic disinfectant (emulsifying type).
CS 71-41 Phenolic disinfectant (soluble type).
CS 90-58 Power cranes and shovels.
CS 101-63 Flue-connected oil-burning space heaters and recessed heaters with vaporizing pot-type burners.
CS 104-63 Warm-air furnaces equipped with vaporizing-type oil burners.
CS 106-57 Boys' pajama sizes (woven fabrics).
CS 109-44 Solid-fuel-burning forced-air furnaces.
CS 111-43 Earthenware (vitreous-glazed) plumbing fixtures.
CS 113-63 Oil-burning floor furnaces equipped with vaporizing pot-type burners.
CS 128-52 Men's sport shirt sizes—woven fabrics (other than those marked with regular neckband sizes).
CS 129-47 Materials for safety wearing apparel.
CS 131-46 Industrial mineral wool products, all types—testing and reporting.
CS 134-46 Cast aluminum cooking utensils (metal composition).
CS 135-46 Men's shirt sizes (exclusive of of work shirts).
CS 145-47 Testing and rating hand-fired hot water supply boilers.
CS 152-48 Copper naphthenate wood preservative (spray, brush, dip applications).
CS 158-49 Model forms for girls' apparel.
CS-165-50 Zinc naphthenate wood preservative (spray, brush, dip applications).
CS 174-41 140-F drycleaning solvent.
CS 177-62 Bituminous-coated metal septic tanks (residential).
CS 178-51 Testing and rating ventilating fans (axial and propeller types).
CS 180-52 Model forms for boys' apparel.
CS 183-51 Boys' trouser size measurements.
CS 185-52 Wool felt.
CS 186-52 Boys' sport outerwear size measurements.
CS 195-60 Warm-air furnace burner units equipped with pressure-atomizing or rotary type oil burners.
CS 196-55 Model forms for toddlers' and children's apparel.
CS 198-55 Infants', children's, girls' and boys' knit underwear (exclusive of rayon, acetate, and nylon).
CS 216-58 Asphalt insulating siding.
CS 235-61 Pressure treated wood fence posts (with oil-type preservatives).
CS 249-62 Pressure-treated Douglas fir marine piles.
CS 250-62 Pressure-treated southern pine marine piles.
CS 271-65 Grading of abrasive grain for grinding wheels.
SPR 17-47 Heavy forged hand tools.
SPR 44-49 Boxboard thicknesses.
SPR 60-55 Machine, carriage and lag bolts, and nuts (case quantity and gross weight).
SPR 72-27 Solid section steel windows.
SPR 77-45 Hickory handles.
SPR 100-47 Welded chain.
SPR 125-31 Waxed tissue paper.
SPR 136-32 Flax and hemp twine.
SPR 147-42 Wire diameters for mineral aggregate production screens.
SPR 157-50 Steel firebox boilers and steel heating boilers (commercial and residential).
SPR 168-37 Braided shoe laces.
SPR 180-41 Copper conductors for building purposes.
SPR 183-46 Brass or bronze valves (gate, globe, angle, and check).
SPR 184-47 Iron valves (gate, globe, angle, and check).
SPR 185-47 Pipe fittings (gray cast-iron, malleable iron, and brass or bronze).
SPR 190-42 Stove pipe and accessories.
SPR 198-50 Wire rope.
SPR 207-60 Pipes, ducts and fittings for warm air heating and air-conditioning systems.
SPR 214-55 Metal-cutting band saws (hard edge flexible back).
SPR 220-46 Open-end and box wrenches.
SPR 227-47 Plumbing fixture fittings and trim for housing.
SPR 229-63 Vises (machinists' and other bench-mounted vises).
SPR 238-50 Convectors.
SPR 245-51 Weldless chain and chain products.
SPR 259-56 Hexagon-head cap screws (case quantity and gross weight).

Public notice of the intention to withdraw these standards was published in the FEDERAL REGISTER on June 21, 1972 (37 F.R. 12248), and a 45-day period was provided for the submission of comments or objections concerning the proposed withdrawal of any of these standards. No valid objections to the withdrawal of any of these standards have been received by the National Bureau of Standards.

The effective date for the withdrawal of these standards will be 60 days after the publication of this notice. This withdrawal action terminates the authority to refer to these standards as voluntary product standards developed under the Department of Commerce Procedures.

LAWRENCE M. KUSHNER,
Acting Director.

AUGUST 18, 1972.

[FR Doc.72-14465 Filed 8-23-72;8:57 am]

Printed from

FEDERAL REGISTER, VOL. 37, NO. 165—THURSDAY, AUGUST 24, 1972