COMMERCIAL STANDARDS CS231 ~~A-E~~ C - 63
ON AIRCRAFT HANGAR DOORS

Fact Sheet

In March 1958, the Hangar and Industrial Door Technical Council requested the cooperation of the Commodity Standards Division, National Bureau of Standards in establishing a series of commercial standards for hangar and industrial doors. **These standards, listed below, are no longer valid and were withdrawn October 2, 1973.**

CS231A-60, Aircraft Hangar Doors of the Manually-Operated Horizontal Sliding Type (Steel Frame),

CS231B-61, Aircraft Hangar Doors of the Individually Power-Operated Horizontal Sliding Type (Steel Frame),

CS231C-63, Aircraft Hangar Doors of the Partial-Group Power-Operated Horizontal Sliding Type (Steel Frame),

CS231D-63, Aircraft Hangar Doors of the Full Group Power-Operated Horizontal Sliding Type (Steel Frame), and

CS231E-63, Aircraft Hangar Doors of the Power-Operated Horizontal Unbraced-Canopy Type (Steel Frame).

The Hangar and Industrial Door Technical Council is no longer in existence.

The Federal Aviation Administration (FAA) may be able to provide assistance and information concerning current standards and requirements. Contact: Engineering and Specifications Division (622A), Office of Airport Safety and Standards, Federal Aviation Administration (FAA), 800 Independence Avenue, SW, Washington, DC 20591; Telephone: (202) 267-3826/-3053; Fax: (202) 267-3505/-3507.

FEDERAL REGISTER

National Bureau of Standards

COMMERCIAL STANDARDS AND SIMPLIFIED PRACTICE RECOMMENDATIONS

Notice of Intent to Withdraw Certain Standards

In accordance with § 10.12 of the Department of Commerce procedures for the development of Voluntary Product Standards (15 CFR Part 10, as revised; 35 F.R. 8349 dated May 28, 1970), notice is hereby given of the Department's intent to withdraw the 81 standards identified below. It has been tentatively determined that each of these Commercial Standards (CS) and Simplified Practice Recommendations (SPR) are no longer technically adequate or used by the industry, or are otherwise not in the public interest.

CS 16-29 Wall Paper.
CS 26-30 Aromatic Red Cedar Closet Lining.
CS 27-36 Mirrors.
CS 28-46 Cotton Fabric Tents, Tarpaulins and Covers.
CS 43-32 Grading of Sulphonated (Sulphated) Oils Saponifiable Types.
CS 61-51 Venetian Blinds (Grade A Custom-Made).
CS 73-61 Old Growth Douglas Fir, Sitka Spruce, and Western Hemlock Doors.
CS 76-39 Hardwood Interior Trim and Molding.
CS 78-40 Ground-and-Polished Lenses for Sun Glasses.
CS 79-40 Blown, Drawn, and Dropped Lenses for Sun Glasses.
CS 89-40 Hardwood Stair Treads and Risers.
CS 92-41 Cedar, Cypress and Redwood Tank Stock Lumber.
CS 119-45 Dial Indicators (For Linear Measurements).
CS 133-46 Woven Wire Netting.
CS 134-46 Cast Aluminum Cooking Utensils (Metal Composition).
CS 140-47 Testing and Rating Convectors.
CS 141-47 Sine Bars, Blocks, Plates and Fixtures.
CS 159-49 Sun Glass Lenses Made of Ground and Polished Plate Glass Thereafter Thermally Curved.
CS 160-49 Wood Fiber Blanket Insulation (For Building Construction).
CS 161-59 "Standard Grade" Hot Dipped Galvanized Ware (Coated After Fabrication).
CS 162-49 Tufted Bedspreads.
CS 167-50 Automotive and General Service Copper Tube.
CS 168-50 Polystyrene Plastic Wall Tiles, and Adhesives for Their Application.
CS 169-50 Galvanized Ware Fabricated from Pregalvanized Steel Sheets (For Standard Grade Items Only).
CS 206-57 Solvent Welded (SWP Size) (Cellulose-Acetate Butyrate Pipe)
CS 225-59 Method of Rating Commercial and Industrial Type Vacuum Cleaners, Portable and Mobile Types.
CS 231A-60 Aircraft Hangar Doors Manually Operated Horizontal Sliding Type (Steel Frame).
CS 231B-61 Aircraft Hangar Doors of the Individually Power-Operated Horizontal Sliding Type (Steel Frame).
CS 231C-63 Aircraft Hangar Doors of the Partial Group Power-Operated Horizontal Sliding Type (Steel Frame).
CS 231D-63 Aircraft Hangar Doors of the Full-Group Power-Operated Horizontal Sliding Type (Steel Frame).
CS 231E-63 Aircraft Hangar Doors of the Power-Operated Unbraced-Canopy Type (Steel Frame).
CS 232-60 Industrial Wire Cloth.
CS 244-62 Roof Drainage Products.
CS 252-63 TFE-Fluorocarbon (Polytetrafluoroethylene) Resin Electrical Insulating Tubing.
CS 263-64 Aluminium Nails.
CS 267-65 Steel Medicine Cabinets.

SPR 6-63 Standard Stock Sizes of American Pattern and Curved Milled Tooth Files and Rasps.
SPR 11-36 Bed Blanket Sizes.
SPR 22-40 Paper (Basic Sheet Sizes).
SPR 31-63 Loaded Shot Shell.
SPR 37-38 Commercial Forms (Invoice, Purchase Order and Inquiry).
SPR 42-61 Grocers' Paper Bags.
SPR 47-54 Cut Tacks and Small Cut Nails.
SPR 51-29 Chasers for Self-Opening and Adjustable Die Heads.
SPR 53-63 Steel Spirals for Reinforced Concrete Columns.
SPR 62-63 Metallic Cartridges.
SPR 76-40 Ash Handles.
SPR 81-28 Binders' Board.
SPR 90-62 Hack-Saw Blades.
SPR 91-32 Glass Containers for Preserves, Jellies and Apple Butter.
SPR 129-59 Merchandise Paper Bags.
SPR 132-36 Ice Cream Cups and Cup Caps.
SPR 146-52 Corrugated and Solid-Fiber Boxes for Canned Fruits and Vegetables.
SPR 150-34 Copper Wire Nails.
SPR 155-49 Cans for Fruits and Vegetables (Names, Dimensions, Capacities and Designated Use).
SPR 162-35 Packaging of Air Brake (Electric Railway) Parts.
SPR 173-54 Stock Folding Boxes for Millinery.
SPR 175-40 Heavy-Duty, Round Nesting Paper, Food and Beverage Containers and Lids.
SPR 187-42 Food Trays or Dishes (Waxed Paper, Molded Wood Pulp, and Wood Types).
SPR 197-51 Glass Containers for Maraschino Cherries.
SPR 206-63 Standard Stock Sizes of Swiss Pattern Files.
SPR 206-55 Fluid-Milk Cans.
SPR 213-45 Asphalt Roll Roofing and Asphalt and Tar-Saturated Felt Products.
SPR 217-49 Copper Water Tube, and Copper and Brass Pipe.
SPR 218-46 Paper Tubes for Packaging Milk Bottle Caps.
SPR 223-47 Wire Nails and Staples.
SPR 228-47 Pallets for Handling Groceries and Packaged Merchandise.
SPR 235-48 Copper and Copper-Alloy Round Seamless Tube.
SPR 241-50 Copper and Copper-Alloy Rod.
SPR 246-51 Wooden Kegs for Nails.
SPR 248-52 Packaging of Standard Malleable Iron Screwed Pipe Fittings, Black or Galvanized.
SPR 250-53 Standard Drug Catalogs.
SPR 251-54 Packaging of Gas Stop Cocks.
SPR 252-60 Standard Sizes of Pint, Quart, and Half-Gallon Rectangular Ice Cream Cartons and Molds.
SPR 254-54 Packaging of Steel Pipe Couplings.
SPR 256-55 Steel Outlet Boxes, Zinc or Cadmium Coated.
SPR 257-55 Thermal Conductance Factors for Preformed Above-Deck Roof Insulation.
SPR 258-56 One-Pound Eastern Flat Margarine Carton.
SPR 261-58 One-Pound Elgin-Style Butter Cartons Sizes.
SPR 262-60 Acoustical Materials.
SPR 263-60 Standard Shapes, Sizes, Grades and Designations of Cemented Carbide Products.

Any comments or objections concerning the intended withdrawal of any of these standards should be made in writing and directed to the Office of Engineering Standards Services, National Bureau of Standards, Washington, D.C. 20234, within 45 days of the publication of this notice. The effective date of withdrawal, where appropriate, will be not less than 60 days after the final notice of withdrawal. Withdrawal action terminates the authority to refer to a published standard as a voluntary standard developed under the Department of Commerce procedures, from the effective date of the withdrawal.

Dated: February 28, 1972.

LEWIS M. BRANSCOMB,
Director.

[FR Doc.72-3253 Filed 3-2-72;8:49 am]

Reprinted from

DONALD R. MACIAS

COMMERCIAL STANDARD CS231C-63

Aircraft Hangar Doors of the Partial Group Power-Operated Horizontal Sliding Type (Steel Frame)

A recorded voluntary standard of the trade published by the U.S. Department of Commerce

For sale by the Superintendent of Documents
U.S. Government Printing Office, Washington 25, D.C. Price 10 cents

U.S. DEPARTMENT OF COMMERCE

OFFICE OF TECHNICAL SERVICES

Commodity Standards Division

With the cooperation of the
National Bureau of Standards
and the Federal Aviation Agency

EFFECTIVE DATE

Having been passed through the regular procedures of the Commodity Standards Division, and approved by the acceptors hereinafter listed, this Commercial Standard is issued by the U.S. Department of Commerce, effective April 15, 1963.

LUTHER H. HODGES, *Secretary.*

COMMERCIAL STANDARDS

Commercial Standards are developed by manufacturers, distributors, and users in cooperation with the Commodity Standards Division of the Office of Technical Services and with the National Bureau of Standards. Their purpose is to establish quality criteria, standard methods of test, rating, certification, and labeling of manufactured commodities, and to provide uniform bases for fair competition.

The adoption and use of a Commercial Standard is voluntary. However, when reference to a Commercial Standard is made in contracts, labels, invoices, or advertising literature, the provisions of the standard are enforcible through usual legal channels as a part of the sales contract.

Commercial Standards originate with the proponent industry. The sponsors may be manufacturers, distributors, or users of the specific product. One of these three elements of industry submits to the Commodity Standards Division the necessary data to be used as the basis for developing a standard of practice. The division by means of assembled conferences or letter referenda, or both, assists the sponsor group in arriving at a tentative standard of practice and thereafter refers it to the other elements of the same industry for approval or for constructive criticism that will be helpful in making any necessary adjustments. The regular procedure of the division assures continuous servicing of each Commercial Standard through review and revision whenever, in the opinion of the industry, changing conditions warrant such action.

SIMPLIFIED PRACTICE RECOMMENDATIONS

Under a similar procedure the Commodity Standards Division cooperates with industries in the establishment of Simplified Practice Recommendations. Their purpose is to eliminate avoidable waste through the establishment of standards of practice for sizes, dimensions, varieties or other characteristics of specific products; to simplify packaging practices; and to establish simplified methods of performing specific tasks

The initial printing of CS231C-63 was made possible through the cooperation of the Hangar and Industrial Door Technical Council.

Aircraft Hangar Doors of the Partial Group Power-Operated Horizontal Sliding Type (Steel Frame)

1. PURPOSE

1.1 The purpose of this Commercial Standard is to establish nationally recognized minimum requirements for design, materials, fabrication, assembly and installation of Aircraft Hangar Doors of the Partial Group, Power-Operated, Horizontal Sliding Type. It is intended to serve as a basis for the preparation of detailed individual job specifications by architect-engineers, and as an aid and guide to producers, contractors, and others interested in the product.

2. SCOPE

2.1 This standard covers the minimum requirements for structural and operational design, materials, methods of construction, and installation features. It defines this style of door and states what the manufacturer provides as the completed door.

2.1.1 This standard covers primarily the fabrication of hangar doors; however, it should be understood that the door cannot be expected to operate satisfactorily unless the door opening is properly prepared according to the manufacturer's recommendations. Therefore certain requirements related to the work of other trades are given in the appendices and it will be necessary that these be adhered to in order to obtain the hangar door manufacturer's guarantee; see Section 4.2 and Appendices A & B. Customary methods of inspection after installation are described in Appendix C.

3. DEFINITION

3.1 A **partial group,** power-operated, horizontal sliding type, aircraft door is a group of three or more leaves, supported on bottom rails in which the leaves move in concert with each other when the group is positioned (see par. 3.2—Arrangement of Leaves). Each group has its own operator (see par. 3.3—Type and Location of Operator) and is independent of any other group. Each group requires operating personnel to walk alongside of the group as it moves.

3.1.1 **Operator.**—For purposes of this standard, the operator is the power unit used to position the doors.

3.2 **Arrangement of Leaves.**—The three-leaf group with center leaf and individual leaf power operation is described and illustrated below.

a) **Center Leaf Powered:** A grouping of three leaves having an operator mounted on the center leaf. The operator is connected to the end leaves through a wrap-around or linear cable system allowing the group, as a unit, to be positioned independently of any other group of leaves.

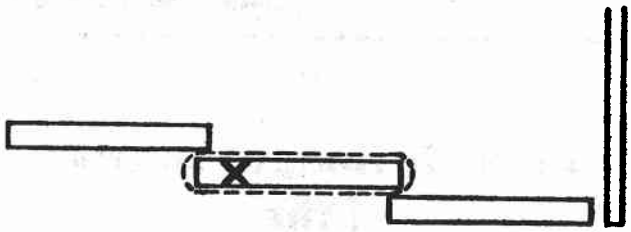

Center Leaf Powered

b) **Individual Leaf Powered:** A grouping of three leaves with each leaf having its own operator, but arranged so that the leaves operate as a unit when being positioned independently of any other group of leaves.

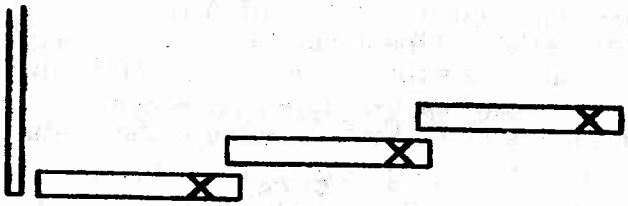

Individual Leaf Powered

NOTE: The leaf arrangement shown is for illustration purposes only. Other arrangements and operator locations are permissible.

☒ Denotes operator location.

3.3 **Type and Location of Operator.**

a) **Center Leaf Powered**—The operator mounted on the center leaf drives one or more bottom wheels by a roller chain and sprocket mechanism. Idler leaves are interconnected by cables.

b) **Individual Leaf Powered**—An operator mounted on each leaf of the group drives one or more bottom wheels by a roller chain and sprocket mechanism.

4. GENERAL REQUIREMENTS

4.1 **Approval Drawings.**—The door manufacturer shall submit for approval, to the proper authority as specified in the individual job specifications, three sets of drawings showing general arrangement of the door, hardware, operators, wiring diagrams, and schematic drawing of electrical controls as they are related to the completed structure. Structural steel details affecting any door requirements shall be submitted to the door manufacturer for review, coordination and approval.

4.2 **Responsibilities.**—The door manufacturer shall furnish all labor, materials, tools, equipment, and services required for the fabrication and installation of Partial Group, Power-Operated, Horizontal Sliding Type, Hangar Doors. The door manufacturer shall **not** provide top guides and supports; bottom rails and their ties; end of travel bumpers; the electric wire, conduit and accessories, and wiring labor required for door operation; the preparation of building jambs and head for the attachment of weather stripping material; glazing;

field paint; or master-keyed cylinders. On cantilever-roof type hangars the metal weather stripping material which attaches to the top guide system is not included as part of the finished door (see Appendix A).

4.3 **Shop Paint.**—All steel, all inaccessible surfaces, all miscellaneous parts, and hardware shall be shop primed. This paint shall be a high quality commercial grade steel primer as required in the individual job specifications. All steel shall be cleaned prior to painting to remove all oil, rust, and other foreign material.

NOTE: The shop coat of paint is a priming coat intended to protect the steel for a temporary period of weathering only and to to provide a base for further painting. The door manufacturer does not assume responsibility for the deterioration that may result from extended exposure to the elements.

4.4 **Weather Stripping Material.**—Material, which is adjustable and readily replaceable, shall be provided on necessary vertical edges, sills, and heads to afford a substantially weather tight installation.

4.4.1 **Non-Metallic Weather Stripping Material.**—Material on vertical edges and sills shall be wipe-type, two-ply cloth-inserted 100% neoprene as required in the individual job specification. The material shall have a minimum thickness of 1/8 inch and shall be retained continuously for its full length and secured with rust-resistant fasteners on 9 inch centers. Clearance between metal parts on vertical edges of leaves, and between leaves and jambs, which are to be weathered, shall not be less than 4 inches.

4.4.2 **Metallic Weather Stripping Material.**—Except on doors for cantilever-roof type hangars, head weather stripping material between each leaf and the top guide system shall be formed of not less than 22 gage [1] galvanized sheet steel (see Fig. 1). (For cantilever-roof type hangars see Appendix A.)

4.5 **Insulation.**—When required, insulation shall be furnished by the door manufacturer, except where the insultation is part of a sandwich panel which is furnished by others. The insulation shall meet the requirements for the geographic location and design as established in the individual job specifications. It shall be installed in accordance with the insulation manufacturer's recommendations, and the insulation shall be protected by liner sheets to a minimum height of 6 feet above the floor.

4.6 **Workmanship.**—All components furnished by the manufacturer (see par. 4.2) shall be free from defects that affect the appearance or the serviceability of the completed unit.

4.7 **Maintenance Information.**—Recommendations or instructions for proper maintenance of the door shall be furnished by the door manufacturer for the guidance of the purchaser.

5. DETAIL REQUIREMENTS

5.1 **Design Criteria.**—Leaves shall be designed and constructed of standard structural sections or formed plates of ample size and strength for loads and stresses imposed under specified conditions in accordance with the latest applicable American Institute of Steel Construction Specification.[2] Leaves shall be designed to withstand the minimum

[1] Galvanized sheet steel gage, thickness 0.0336 inches within commercial tolerances.
[2] Available from the American Institute of Steel Construction, 101 Park Avenue, New York 17, N.Y.

external or internal wind loads specified in ASA A58.1–1955,[3] but at no time shall the minimum be less than 20 pounds per square foot, with a wind load deflection not to exceed the door height in inches divided by 120.

5.2 **Materials.**—All framing members shall be either standard structural sections or formed plates. Structural sections and formed plates shall comply with the latest American Iron and Steel Institute Specifications.[4] Flat external door covering shall be a commercial quality prime steel sheet, not less than No. 13 gage.[5] Other types of covering material are acceptable when dictated by architectural treatment; however, due consideration must be given to framing design and clearance. When aluminum covering is used, the contact face of the frame shall have a protective coating to eliminate any possibility of electrolysis. All materials shall be of grades which equal or exceed requirements established by the American Society for Testing and Materials.[6]

5.3 **Door Leaf Construction.**

5.3.1 **General.**—Leaf sections in sizes suitable for convenient shipping shall be of welded construction and all joints shall develop 100% of the strength of the framing members. An alternate and equally acceptable construction is one in which members are prefabricated for field assembly. Under this alternate method of construction, framing members can be either welded or bolted. If bolting is used, rib or high strength bolts must be used for fastening main members. Common bolts are satisfactory for secondary members.

5.3.2 **Fabrication.**—Vertical members shall be continuous throughout the height of the door. Vertical members adjacent to each other and being joined together in the field shall be accurately prepared to facilitate field assembly in accordance with standard practice. All frames and framing members shall be true to dimension and square in all directions, and no leaf shall be bowed, warped, or out of line, in the vertical or horizontal plane of the door opening, by more than ⅛ inch in 20 feet so as to allow clearance between leaves. To stiffen the back flange of all main vertical members, full depth members or adequate horizontal gusset plates at the one-third points shall be considered minimum lateral support. Diagonal bracing shall be provided so that the completed leaf assembly will be adequately braced to withstand shipping, assembly, and operational loads. Exposed welds and welds which interfere with the installation of various parts, such as cover sheets and sash, shall be ground smooth. Where flat cover sheets are used, they shall be sealed with a mastic or caulking compound of a quality as required in the individual job specifications and fastened to the frame either by welding, spot welding, threaded fasteners or drive fasteners on 9 inch centers. Where flat sheets are attached as either covering or liner sheets, the clear unsupported area shall not exceed 25 square feet. All outside edges of cover sheets shall be made weathertight before shop painting.

5.4 **Sash Inserts.**—When required, all sash shall be of standard commercial fixed type construction suitable for glazing in accordance with standard practice. All outside edges of sash shall be made

[3] Available from American Standards Assn., 10 E. 40th Street, New York 16, N.Y.
[4] Available from American Iron & Steel Institute, 150 E. 42d Street, New York 17, N.Y.
[5] U.S. Gage, thickness 0.0897 inches within commercial tolerances.
[6] Available from American Society for Testing and Materials, 1916 Race Street, Philadelphia 3, Pa.

weathertight before shop painting. Sash shall be either welded or through bolted to the door leaf frame on 9 inch centers.

5.5 **Personnel Doors.**—The manufacturer shall provide at least one personnel door complete with sill for each 80 linear feet of hangar door opening as a safety requirement. Doors shall be 1¾ inch thick, swing or slide type, standard industrial steel doors and shall be not less than 3 feet in width by 7 feet in height and have provisions for glazing the upper portion.

5.5.1 **Swing Doors.**—These shall have suitable sized closers, standard hinges, and a lockset designed to lock the door securely by key from the outside, and be operable from the inside by a lever, thumb turn or other suitable device not requiring a key.

5.5.2 **Slide Doors.**—These shall be top-hung, gravity closing with anti-friction bearing trolleys and have a suitable locking arrangement as described in paragraph 5.5.1. Bottom-supported doors are equally acceptable.

5.5.3 **Electrical Interlock.**—Each personnel door shall be provided with an electrical interlock switch to prevent motor operation of the group in which it is located when the personnel door is open.

5.6 **Truck Doors.**—Truck doors are not recommended but can be included when required in the individual job specification.

5.7 **Hardware.**—Hardware shall be of a suitable design for use on hangar doors. The door manufacturer shall provide top guide rollers, bottom rollers, inter-leaf bumpers, tractor pulls, track cleaners, and toe guards as part of the finished door.

5.7.1 **Top-Guide Rollers.**—Except in the case of a cantilever-roof hangar, each leaf shall be provided with stationary top-guide roller assemblies. Top-guide rollers shall be of the horizontal type with either a single or double wheel. Rollers shall be made of either steel or malleable iron, and shall be of a suitable size for satisfactory performance under the designated load conditions. Rollers shall be provided with adequate bearings (see Fig. 1).

5.7.1.1 In cases where doors shall be used in a cantilever-roof type hangar, top roller assemblies shall be designed to move up and down within the specified deflection of the roof in the vicinity of the door opening. Roller assemblies shall be designed to allow easy removal through the top of the guide system (see Appendix B.) One type of acceptable top guide arrangement is shown in Figure 2. The top guide roller assemblies are designed with both horizontal and vertical rollers built into a frame which is connected in such a manner as to transmit the specified loads from the door to the hangar structure.

5.7.2 **Bottom Rollers.**—Bottom rollers shall be made of either cast-steel or welded pressed steel having a minimum tread diameter in accordance with Table 1. Vertically adjustable rollers shall be provided where the height-to-width ratio of the door leaf exceeds 3. Rollers shall be designed to permit removal without taking the door leaf from its position on the rail.

5.7.2.1 **Cast-Steel Rollers.**—Cast-steel rollers shall be made of high-strength steel castings meeting or exceeding the minimum requirements as given in ASTM Designation A148–60, Standard Specifications for High-Strength Steel Castings for Structural Purposes, for Grade 80–40.[6] For large doors or special applications where higher mechanical stresses are required for cast-steel rollers than specified by Grade 80–40, such grade shall be furnished as required in the individual

680794 O - 63 - 2

TABLE 1.—*Minimum roller sizes*

Tread diameter of roller*	A.S.C.E. or A.R.E.A. rail size [7]	Area of door leaf
Inches	*Weight in pounds per yard*	*Square feet*
9	16	Up to 275
12	20	275 to 400
18	40	400 to 1500
24	60	Over 1500

*The above table applies to hangar doors of standard construicton. On special doors having unusually heavy wheel loads, wheel size shall be determined by the actualwheel loading.

job specifications; or when a specific hardness of the rim is required, the cast-steel rollers shall be furnished to a Brinell hardness range as required in the individual job specifications.

5.7.2.2 **Welded Pressed-Steel Rollers.**—Welded pressed-steel rollers shall be constructed by using pressure-formed discs, heavy-walled tubing for hubs, and rolled rims, all of which shall be continuously arc welded. The material used shall, in all cases, meet or exceed the minimum requirements given in the latest edition of ASTM Designation A7, Specification for Steel for Bridges and Buildings.[6]

5.7.2.3 **Treads.**—Treads shall be machined concentric with bearing seats. The horizontal clearance between wheel and rail shall be not more than 1/8 inch at the bottom nor more than 1/4 inch at the edge of the flange. Bearing seats shall be accurately machined for a press fit to meet the bearing manufacturer's requirements.

5.7.2.4 **Bearings.**—Bearings shall be either ball- or roller-type, arranged so that both the vertical loads and the horizontal wind loads can only be transmitted from the leaf to the wheels through the bearings. Bearings shall be provided with seals to retain the grease and prevent the entrance of dirt, and shall be equipped with high-pressure grease fittings.

5.7.2.5 **Alternate Design of Bottom Rollers.**—Other designs of bottom rollers may be used providing all the requirements in paragraphs 5.7.2.3 and 5.7.2.4 are met.

5.7.3 **Locking Devices.**—The hangar door shall not be equipped with locking devices, except as specified for personnel doors in paragraphs 5.5.1 and 5.5.2.

5.7.4 **Inter-Leaf Bumpers.**—Rubber bumpers shall be provided to prevent leaves from coming in contact with one another.

5.7.5 **Tractor Pulls.**—Tractor pulls shall be provided so that the leaves can be towed by a tractor or other suitable equipment in the event of power failure.

5.7.6 **Track Cleaners.**—A suitable device shall be provided to clear debris from the rail head and wheel flange grooves as the leaf is moved.

5.7.7 **Toe Guards.**—An adjustable, full length, flexible, toe guard reaching to the floor shall be attached to the interior bottom edge of each leaf.

5.8 **Cable System.**—The minimum size for the cable that interconnects the leaves shall be 3/8 inch, and the cables shall be of the independent wire rope center type. Sheaves over which the cables pass

[6] Available from American Society for Testing and Materials, 1916 Race Street, Philadelphia 3, Pa.

[7] Available from American Society of Civil Engineers, 33 West 39th St., New York 18, N.Y. (or American Railway Engineering Association).

shall have a pitch diameter of at least 24 cable diameters, and shall have either ball- or roller-type bearings of a sufficient capacity for the operating loads. Grease fittings shall be provided for the sheave bearings.

6. DOOR OPERATION

6.1 **Operating Unit.**—Operation of the leaves shall be by either a center leaf powered (par. 3.2a) or an individual leaf powered (par. 3.2b) drive. Either drive system shall be designed to move the lead leaf at a recommended speed of 60 feet per minute at zero wind load conditions, and shall be operable up to and including a maximum wind load of 8 pounds per square foot. The operating unit shall consist of either a separate motor and gear reducer or a gearhead motor, high-speed shaft brake (see exception under par. 6.2) and necessary roller chains and sprockets. The system shall be provided with adequate overload protection for the drive unit by use of a torque limiting device. The system shall also be provided with a means for emergency conversion to tractor towing operation with adequate electrical interlocks to protect both equipment and operating personnel. The motor shall be a single speed, squirrel cage type of sufficient size to operate the leaves under zero wind load conditions at not more than 75 percent of the rated capacity. The gear reduction unit shall allow a reversal of effort through the gears without damage to the unit. The operating mechanism shall be covered on the interior of the leaf by a removable cover plate. In cases where totally enclosed motors are used, wire mesh or expanded metal covers are acceptable.

6.1.1 **Center Leaf Powered.**—Operation of a partial group of three leaves shall be by traction drive with the power unit mounted on the center leaf driving one or more wheels of the leaf. A wrap-around cable or linear cable shall be furnished on the power leaf to move the adjacent leaves. Movement of the power leaf shall allow stacking and unstacking of the group with two leaves moving simultaneously. The group may then be positioned as desired in the opening. The necessary cable, cable sheaves, housing, pickups, and miscellaneous hardware, shall be furnished for the cable system specified. (The three leaf group is described. Other groupings are also permissible.)

6.1.2 **Individual Leaf Powered, Traction Drive.**—Operation of a partial group of three leaves shall be by traction drive with the power unit mounted on each leaf and shall drive one or more wheels of the leaf. Leaves of the group shall be electrically and mechanically interlocked to prevent separation of leaves when extended. Movement of an end leaf shall allow stacking progressively; and after stacking, leaves shall move as a group to the desired location in the opening. In unstacking, two stacked leaves of the group shall move simultaneously, the center leaf stopping at its extended position with the remaining leaf continuing until it has reached its fully extended position. (The three leaf group is described. Other groupings are also permissible.)

6.2 **Braking System.**—The braking system shall be designed to insure stoppage of the leaves, under normal dry conditions, within the safety edge over-travel limit. The brake system shall be either the electro-mechanical spring, hydraulic or pneumatic type, operating on either the wheel or rail, and shall be in addition to the high-speed

shaft brake operating through the motor drive system. A hand release shall be provided to release the brake when it becomes necessary to tow the leaves with a tractor. The brake shall also be provided with an interlock switch to prevent the motor from starting when the hand release is used. Under the condition of this paragraph, and when a fluid coupling is used, the high-speed shaft brake required under paragraph 6.1 is optional.

6.3 **Electrical Equipment and Control.**—The door manufacturers shall furnish each group with the proper electrical equipment and controls, built in accordance with the latest NEMA [8] Standards. All equipment, control circuits, and safety edge circuits shall be installed in accordance with the National Electrical Code, Standard No. 70,[9] and requirements of other authority having jurisdiction and where located 18 inches or less above the floor shall be explosion-proof.

6.3.1 **Starters.**—The magnetic reversing starters shall be factory wired with overload and undervoltage protection, equipped with mechanical and electrical interlocks and with transformers for the control and safety edge circuits all enclosed in a hasp-equipped general purpose NEMA I [8] enclosure with a wiring diagram placed on the inside of the cover.

6.3.2 **Push Buttons.**—Each group of leaves shall be controlled by constant pressure mushroom head push buttons mounted at each end of the group of leaves; one button for stacking the leaves, one for unstacking the leaves and one for moving leaves as a group. Removing pressure from the buttons shall stop the movement of the group. The leaf mounted on the outer rail shall have the push buttons accessible from the interior face. The button (or buttons) at the end of the leaf shall allow it to travel with the adjacent edge as the leading edge only. Controls shall not be reversible. All interior push buttons shall be in general-purpose NEMA I enclosures. All exterior push bottoms shall be in water-tight NEMA IV enclosures.

6.3.3 **Limit Switches.**—Limit switches shall be provided for both ends of the group of leaves. The limit switch assembly shall have stainless steel actuating rods with sufficient overtravel so that the group of leaves cannot bump another group of leaves or any portion of the building. The safety edges shall not be used as limit switches.

6.4 **Safety Edge.**—The leading edge of each group of leaves shall be provided with safety edges from 1 inch above the floor to the top of the door leaf. For leaves 8 inches thick or less, a single run of safety edge shall be furnished. For leaves over 8 inches thick a double run of safety edge shall be furnished, properly spaced to provide the maximum degree of safety in stopping the group. The safety edges shall be designed to provide a minimum of 3½ inches of overtravel after actuation until solid resistance is met. Actuation of the safety edge on the leading edge of the group of leaves, considering its direction of travel, shall stop its movement. Safety edges shall be either electric or pneumatic type.

6.4.1 **Electrical Safety Edges.**—The lower portion of the safety edges to a height of approximately 5 feet shall be made independently removable for convenience in servicing or repair. The remainder of the edge may be in one piece. The safety edges shall be connected in

[8] Available from the Electrical Manufacturers Association, 155 East 44th Street, New York 17, N.Y.

[9] Available from National Fire Protection Assn., 60 Batterymarch Street, Boston 10, Mass.

series with the necessary relays and resistors to make the system complete. The service shall not be more than 24 volts (nominal) and the circuit shall be normally energized so that the malfunction of any of the component parts will make the door inoperative.

6.4.2 **Pneumatic Safety Edges.**—Pneumatic safety edges shall operate by means of displaced air actuating suitable air-pressure switches. A minimum of one air-pressure switch shall be provided for each 20 feet of vertical edge. The electrical service to the pressure switch shall not exceed nominal 150 volts, and the circuit shall be normally energized so that malfunction of any of the component parts will make the door inoperative. Actuation of the pressure switches shall lock out the motor control until reset. The reset device shall be located beyond arms reach of affected control station.

6.5 **Warning Device.**—An audible signal shall be provided on each end of each group of leaves and shall operate when the push button is actuated for movement of the group in either direction. The device may be either electrically or mechanically activated.

7. INSTALLATION

7.1 **Doors and Accessories.**—All leaves and accessories shall be installed in a thoroughly workmanlike manner. All openings and other accessories shall be completely prepared in advance of the actual door installation by the proper contractor in accordance with the approved shop and installation drawings (see par. 4.1). Doors shall be installed in strict accordance with the directions of the hangar door manufacturer. No doors shall be installed until the hangar roof has been completed and the adjustment of the door guides completed by the structural steel contractor, in accordance with approved tolerances given in Appendix "A".

8. CERTIFICATION

8.1 In order to assure the purchaser that the design, quality, and workmanship are as specified herein, producers may individually or in concert with their trade association, issue guarantees or mark each door, leaf, or part thereof by a stamp, or label as conforming to this standard. The following working is recommended:

> "This Partial Group, Power Operated, Horizontal Sliding Type, Aircraft Hangar Door complies with all of the requirements of Commercial Standard CS 231C–63, as developed by the trade under the Commodity Standards Procedures and issued by the U.S. Department of Commerce."
>
> ----------
>
> (Name of Manufacturer)

APPENDIX A

The following numbered items describe work and responsibilities required to be performed by trades other than the door manufacturer and it is recommended that this information be closely followed:

1. **Top Guide and Bottom Rail Tolerances.**—In order to assure proper operation of the sliding door leaves, it is recommended that the installation of bottom rails be done only after the top guide system is in place. Top guides and bottom rails shall be furnished and installed to the following tolerances:

(a) **Top Guides and Supports:**

Vertical: Nominal architectural elevation to be held within plus or minus 1/4 inch.

Lateral: Nominal center to center dimensions to be held within plus or minus 1/8 inch with variation from nominal at no greater rate than 1/8 inch in 20 feet. Joints of head guides are not required to be welded, but guides must be shimmed or ground so that adjoining guide surfaces are not out of line more than 1/16 inch. All head guide tolerances are to be met after dead load is imposed upon the building frame.

(b) **Bottom Rails and Rail Ties:**

Vertical: Rails to be set to grade within plus or minus 1/4 inch with variations from grade at no greater rate than 1/8 inch in 20 feet.

Lateral: The nominal design relationship between top guides and bottom rails must be maintained. Center to center dimension of bottom rails shall be held within plus or minus 1/8 inch with variation from nominal at no greater rate than 1/8 inch in 20 feet. All rail joints shall either be welded and ground smooth or spliced plates installed in accordance with American Society of Civil Engineers' Standards.[10]

(c) **End of Travel Bumpers:**

Bumpers shall be located at the end of door travel to provide for emergency stopping of doors. The dimensions and location shall be in accordance with approved drawings or the door manufacturer's recommendations.

2. **Glazing.**—All glass to be furnished and installed in accordance with standard practice.

3. **Field Paint.**—All field paint and painting to be in accordance with specified requirements and shall also include painting of bolt heads and nuts, field welds, and touch-up of abrasions in the shop coat. Painters shall exercise care and be specifically cautioned not to paint operating parts, mechanisms or limit switches. Field paint requirements should be modified to take into consideration atmospheric conditions and geographic location of the installation.

4. **Locks.**—If master-keyed lock cylinders are desired in personnel doors, they shall be included in the building hardware specifications. Any padlocks or special locks for electrical control panels shall also be included in the building hardware specifications.

5. **Metallic-Head Weather Stripping Material.**—Metallic-head weather stripping material for doors to be used in cantilever-roof type hangars must be designed and fabricated to accommodate the total deflection of the roof in the vicinity of the opening. Such weather stripping material shall be designed to fasten to the building and shall be galvanized steel of sufficient thickness to adequately withstand the specified wind loads without permanent deformation. It is anticipated that the material will be furnished and installed by the same trade that furnishes the top guide system, so all preparation for fasteners can be done at the fabrication shop. However, to min-

[10] Available from American Society of Civil Engineers, 33 W. 39th Street, New York 18, N.Y.

imize possibility of damage to the weather stripping material, it is recommended that its installation be done after the doors are in their final position on the rails.

6. **Preparation for Weather Stripping Material.**—Where weather stripping material attaches to building jambs, soffits, etc., the preparation and installation of mountings, holes in building members, and other provisions for attachment are to be in strict accordance with the door manufacturer's drawings.

7. **Electrical Wiring and Source of Power.**—All conduit, wire, junction boxes, trolley ducts, flexible multi-conductor cables, accessories, and wiring to and between all electrical equipment on or for the doors shall be installed in accordance with door manufacturer's diagram. Where electric power is not available at the site of the installation, the buyer or his agent shall make provision to have a temporary source of electrical power supplied as is deemed necessary by the door manufacturer for the proper installation of doors.

APPENDIX B

The following numbered items are design features which are intended to guide the architect-engineer in the initial building layout work:

1. **Clearance Between Leaves.**—Under certain conditions it is possible for the leaf design thickness to be insufficient to accommodate the operator. Clearance between leaves in this case shall provide for the overhang of operator components. In general, 15 inches are required for operator space.

2. **Access to Rollers.**—Provision shall be made to facilitate installation, maintenance, and replacement of top rollers.

3. **Clearance for Operator Unit.**—Due to the possibility of the operator unit extending beyond the limits of the thickness of the leaf, due consideration must be given in the design of the door pocket width to allow sufficient clearance from the farthest projection of the operator unit to the face of the pocket framing. A minimum of 18 inches should be allowed from the center line of the power leaf rail to the farthermost projection on the interior wall of the door pocket.

4. **Tail Doors.**—Tail doors can be provided to increase the height of opening for a limited width at the center of the opening, to allow access to a greater range of aircraft. For additional information, refer to Commercial Standards for:

Vertical Lift doors
Turn-over doors
Unbraced Canopy doors

5. **Sheave Clearance.**—A minimum clearance of 4 inches shall be maintained between the extreme faces of adjacent leaves in the vicinity of the inter-connecting cables to allow sufficient space for the cable sheaves and cable pick-ups.

6. **Clearance for Weather Stripping Material.**—Clearance between metal parts on vertical edges of leaves, and between leaves and jambs, which are weather stripped, shall not be less than 4 inches.

7. **Pocket Depth Clearance.**—Pocket depth to be equal to the length of the longest door leaf, plus a minimum of 3 feet to allow adequate clearance for the cable sheave brackets extending beyond the training edge of the leaves.

8. **Rail Drains.**—Drainage should be provided for the full length of the bottom rails. In cold areas it may be desirable to provide defrosting equipment below the rails.

APPENDIX C

The following procedures are recommended for inspection and testing of the installed doors:

Inspection of the hangar door should be made by the purchaser or his agent immediately after installation, at which time the door manufacturer or his representative will perform a complete operating test. Any defects disclosed by the test are to be corrected by the door manufacturer and the installation delivered in an acceptable operable condition. After such inspections and tests, and with the doors in proper operating condition, a separate written acceptance of the installation is usually given the door manufacturer by the purchaser and/or owner or his representative.

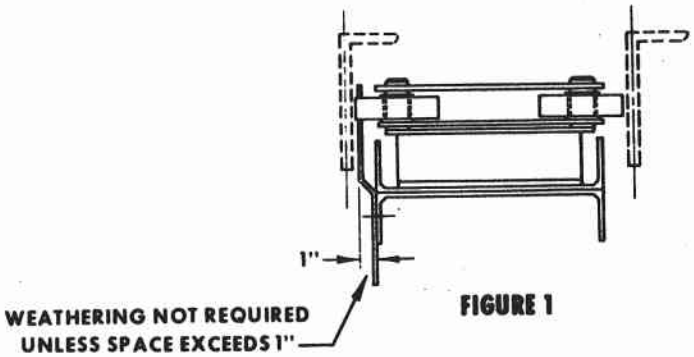

FIGURE 1

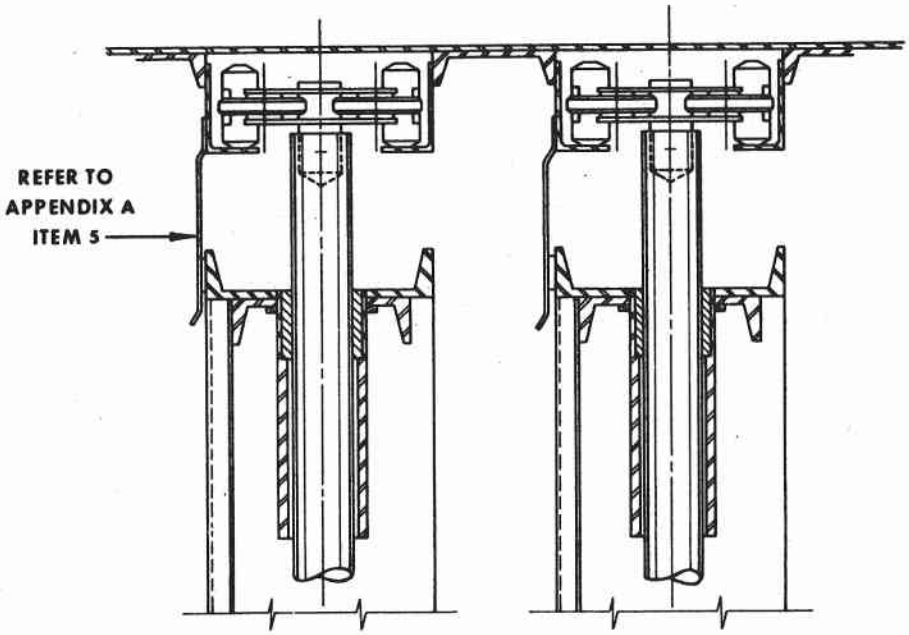

FIGURE 2

ACCEPTABLE TOP ROLLER ARRANGEMENTS

HISTORY OF PROJECT

In March 1958, the Hangar and Industrial Door Technical Council requested the cooperation of the Commodity Standards Division in establishing a series of Commercial Standards for hangar and industrial doors. This standard is the 3d in the series.

NOTE: The following is a list of Commercial Standards and proposed standards for other types of hangar and industrial doors which have been proposed by the Hangar and Industrial Door Technical Council:

CS231A–60, Aircraft Hangar Doors of the Manually-Operated Horizontal Sliding Type.

CS231B–61, Aircraft Hangar Doors of the Individually Power-Operated Horizontal Sliding Type.

CS231D–63, Aircraft Hangar Doors of the Full Group, Power-Operated, Horizontal Sliding Type (Steel Frame).

CS231E–63, Aircraft Hangar Doors of the Power-Operated, Unbraced-Canopy Type (Steel Frame).

Proposed Commercial Standard for Industrial Doors of the Mechanically and Power-Operated, Vertical Lift Type.

Proposed Commercial Standard for Industrial Doors of the Two-Leaf Turnover Type.

Information on these standards may be obtained by writing the Commodity Standards Division, U.S. Department of Commerce, Washington 25, D.C.

The Council, through its Technical Committee, prepared a draft, which was circulated to representative groups of manufacturers, architects, airports, and municipalities for preliminary comment and approval. From suggestions offered, the draft was modified to coincide with the consensus of opinion expressed and was reviewed by the Federal Aviation Agency and the National Bureau of Standards. Copies were then circulated to the industry for written acceptance, and through trade endorsement was adopted and established as a voluntary standard of practice becoming effective April 15, 1963.

STANDING COMMITTEE

The following individuals comprise the membership of the standing Committee, which is to review, prior to circulation for acceptance, revisions proposed to keep the standard abreast of progress. Comment concerning the standard and suggestions for revision may be addressed to any member of the committee or to the Commodity Standards Division, Office of Technical Services, U.S. Department of Commerce, which acts as secretary for the committee.

A. E. Wetter, Byrne Doors, Inc., 1603 E. Nine Mile Rd., Ferndale 20, Mich. (Chairman)

C. J. Erny, The Peelle Co., 47 Stewart Ave., Brooklyn 37, N.Y.

Arthur Kohn, Fleming Steel Co., New Castle, Pa.

W. R. Yokel, International Steel Co., Hangar & Industrial Door Div., 1321 Edgar St., Evansville 7, Ind.

Edward E. Ingraham, Manager, LaGuardia Airport, Box 577, Flushing 71, N.Y. (Representative from the American Association of Airport Executives)

V. Neisch, American Airlines, 100 Park Avenue, New York, N.Y.

D. P. Denitto, Roberts and Schaefer Co., 254 W. 54th St., New York, N.Y.

Robert E. Linton, Albert Kahn Associated Architects and Engineers, Inc., New Center Bldg., Detroit 2, Mich.

Project Manager: Edward J. McCamley, Commodity Standards Division, Office of Technical Services, U.S. Department of Commerce.

Technical Advisers: Stanley Dube, Airport Engineering Branch, Airports Services, Federal Aviation Agency; Stephen A. Cannistra, Installation & Materiel Service, Federal Aviation Agency.

ACCEPTORS

The manufacturers, distributors, users and others listed below have individually indicated in writing their acceptance of this Commercial Standard prior to its publication. The acceptances indicate an intention to utilize the standard as far as practicable, but reserve the right to depart from it as may be deemed desirable. The list is published to show the extent of recorded public support for the standard and should not be construed as indicating that all products made by the acceptors actually comply with its requirements.

Products that meet all requirements of the standard may be identified as such by a certificate, grade mark, or label. Purchasers are encouraged to require such specific representations of compliance, which may be given by the manufacturer whether or not he is an acceptor.

ASSOCIATIONS

(General Support)

American Institute of Architects, Washington, D.C.

FIRMS AND OTHER INTERESTS

Baumer, Herbert (Architect), Columbus, Ohio

Byrne Doors, Inc., Detroit, Mich.

Camlet, J. Thomas (Architect & Engineer), Garfield, N.J.

Capitol Steel & Iron Co., Oklahoma City, Okla.

Central Airlines, Inc., Fort Worth, Tex.

Conrad & Cummings (Associated Architects), Binghamton, N.Y.

Dresser Ideco Co., Columbus, Ohio

Erwin-Newman Co., Houston, Tex.

Fleming Steel Co., New Castle, Pa.

Hardy Doors, Inc., Detroit, Mich.

Hartley Boiler Works, Inc., Montgomery, Ala.

International Steel Co., Evansville, Ind.

Massachusetts Port Authority, Boston, Mass.

McPherson Co. (Engineers-Architects), Greenville, S.C. (General Support)

Mesker, Geo. L., Steel Corp., Evansville, Ind.

Miller, Miller & Associates (Architects), Terre Haute, Ind.

Northeast Airlines, Inc., E, Boston, Mass.

Pendleton Municipal Airport, Pendleton, Oreg.

Piedmont Airlines, Winston-Salem, N.C.

St. Joseph County Airport, South Bend, Ind.

Southern Air Transport, Inc., Miami, Fla.

Stoetzel, Ralph, Inc. (Architects), Chicago, Ill.

Trans World Airlines, Inc., Kansas City, Mo.

U.S. GOVERNMENT

Army, Dept. of the, Of. of Chief of Engineers, Washington, D.C.

GSA, Standardization Div., Federal Supply Service, Washington, D.C. (General Support)

Health, Education, and Welfare, Dept. of, Washington, D.C.

Interior, Dept. of the Div. of Property Management, Washington, D.C.

ACCEPTANCE OF COMMERCIAL STANDARD

CS231C-63 Aircraft Hangar Doors of the Partial Group, Power-Operated, Horizontal Sliding Type (Steel Frame)

If acceptance has not previously been filed, this sheet properly filled in, signed, and returned will provide for the recording of your organization as an acceptor of this Commercial Standard.

Date_____

Commodity Standards Division
Office of Technical Services
U. S. Department of Commerce
Washington 25, D. C.

Gentlemen:

We believe that this Commercial Standard constitutes a useful standard of practice, and we individually plan to utilize it as far as practicable in the

production[1] distribution[1] purchase[1] testing[1]

of this commodity.

We reserve the right to depart from the standard as we deem advisable.

We understand, of course, that only those articles which actually comply with the standard in all respects can be identified or labeled as conforming thereto.

(Cut on this line)

Signature of authorized officer_____
(In ink)

(Kindly typewrite or print the following lines)

Name and title of above officer_____

Organization_____
(Fill in exactly as it should be listed)

Street address_____

City, zone, and State_____

[1] Underscore the applicable words. Please see that separate acceptances are filed for all subsidiary companies and affiliates which should be listed separately as acceptors. In the case of related interest, trade associations, trade papers, etc., desiring to record their general support, the words "General support" should be added after the signature.

TO THE ACCEPTOR

The following statements answer the usual questions arising in connection with the acceptance and its significance:

1. *Enforcement.*—Commercial Standards are commodity specifications voluntarily established by mutual consent of those concerned. They present a common basis of understanding between the producer, distributor, and consumer and should not be confused with any plan of governmental regulation or control. The United States Department of Commerce has no regulatory power in the enforcement of their provisions, but since they represent the will of the interested groups as a whole, their provisions through usage soon become established as trade customs, and are made effective through incorporation into sales contracts by means of labels, invoices, and the like.

2. *The acceptor's responsibility.*—The purpose of Commercial Standards is to establish, for specific commodities, nationally recognized grades or consumer criteria, and the benefits therefrom will be measurable in direct proportion to their general recognition and actual use. Instances will occur when it may be necessary to deviate from the standard and the signing of an acceptance does not preclude such departures; however, such signature indicates an intention to follow the standard, where practicable, in the production, distribution, or consumption of the article in question.

3. *The Department's responsibility.*—The major function, performed by the Department of Commerce in the voluntary establishment of Commercial Standards on a nationwide basis is fourfold: First, to act as an unbiased coordinator to bring all interested parties together for the mutually satisfactory adjustment of trade standards; second, to supply such assistance and advice as past experience with similar programs may suggest; third, to canvass and record the extent of acceptance and adherence to the standard on the part of producers, distributors, and users; and fourth, after acceptance, to publish and promulgate the standard for the information and guidance of buyers and sellers of the commodity.

4. *Announcement and promulgation.*—When the standard has been endorsed by a satisfactory majority of production or consumption in the absence of active, valid opposition, the success of the project is announced. If, however, in the opinion of the standing committee or of the Department of Commerce, the support of any standard is inadequate, the right is reserved to withhold promulgation and publication.

U.S. GOVERNMENT PRINTING OFFICE: 1963 O—680794