NAT'L INST. OF STAND & TECH R.I.C.
A11103 951917

NIST
PUBLICATIONS

Voluntary Product Standard

PS 2-92

U.S. DEPARTMENT OF COMMERCE/Technology Administration
National Institute of Standards and Technology

Performance Standard for Wood-Based Structural-Use Panels

QC
100
.U563
PS-2-92
1992

UNITED STATES DEPARTMENT OF COMMERCE
Barbara Hackman Franklin, Secretary

TECHNOLOGY ADMINISTRATION
Robert M. White, Under Secretary for Technology

NATIONAL INSTITUTE OF STANDARDS AND TECHNOLOGY
John W. Lyons, Director

Voluntary Product Standard
PS 2-92

Performance Standard for Wood-Based Structural-Use Panels

Abstract

This Standard covers the performance requirements, adhesive bond durability, panel construction and workmanship, dimensions and tolerances, marking, and moisture content of structural-use panels. It covers a variety of products, including plywood, waferboard, oriented strand board, structural particleboard, and composite panels. The Standard classifies panels by exposure durability and by grade. It provides test methods, a glossary of trade terms and definitions, and a quality certification program whereby agencies inspect, sample, and test products for qualification under this Standard. Information regarding reinspection practices is provided in an appendix.

A Standard Review Committee, established according to procedures of the U.S. Department of Commerce, oversaw development of the standard.

Key words: adhesive bond durability; certification; construction sheathing; dimensions and tolerances; marking; moisture content; oriented strand board; panel construction; performance requirements; particleboard; plywood; test methods, voluntary standard; waferboard, wood-based panels.

Natl. Inst. Stand. Technol. Prod. Stand. PS 2-92, 31 pages (Dec. 1992)
CODEN: NPSDED

For sale by the Superintendent of Documents, U.S. Government Printing Office, Washington, DC 20402

NIST-VPS
QC
100
.U563
#PS2-92
1992

VOLUNTARY PRODUCT STANDARDS

Voluntary Product Standards are developed under procedures published by the Department of Commerce in Part 10, Title 15, of the Code of Federal Regulations. The purpose of these standards is to establish nationally recognized requirements for products and to provide all concerned interests with a basis for common understanding of the characteristics of the products. The National Institute of Standards and Technology administers the Voluntary Product Standards program on a reimbursable basis.

Establishment of a VOLUNTARY PRODUCT STANDARD

The role of the National Institute of Standards and Technology in the establishment of a *Voluntary Product Standard* is to (1) act as an unbiased coordinator in the development of the standard, (2) provide editorial assistance in the preparation of the standard, (3) supply such assistance and review as is required to assure the technical soundness of the standard, (4) seek satisfactory adjustment of valid points of disagreement, (5) determine the compliance with the criteria of the Department's procedures, (6) provide secretarial functions for each committee appointed under the Department's procedures, and (7) publish the standard as a public document.

Producers, distributors, users, consumers, and other interested groups contribute to the establishment of a *Voluntary Product Standard* by (1) initiating and participating in the development of the standard, (2) providing technical or other counsel relating to the standard as appropriate, (3) promoting the use of and support for the standard, and (4) assisting in keeping the standard current with respect to advancing technology and marketing practices.

Use of a VOLUNTARY PRODUCT STANDARD

The use of a *Voluntary Product Standard* is voluntary. The National Institute of Standards and Technology has no regulatory power in the enforcement of the provisions of the standard; however, since the standard represents a consensus of all interested groups, its provisions are likely to become established as trade customs. In addition, when a standard is made a part of a legal document, such as a sales contract or code, compliance with the standard is enforceable.

The benefits derived from a *Voluntary Product Standard* are in direct proportion to its general recognition and actual use. Producers and distributors whose products meet the requirements of a Voluntary Product Standard may refer to the standard in advertising and on labels to promote greater public understanding for confidence in their products. Purchasers may order products conforming to the requirements of the standard.

For copies of the *Voluntary Product Standards* procedures or for more information concerning the development and use of these standards, one may write to the Office of Standards Services, National Institute of Standards and Technology, Gaithersburg, MD 20899.

TABLE OF CONTENTS

SECTION			PAGE
1.	**Scope**		1
2.	**Terminology**		1
3.	**Reference Publications**		2
4.	**Classification**		
	4.1	General	3
		4.1.1 Exposure durability	3
		4.1.2 Grade	3
5.	**Requirements**		
	5.1	General	3
	5.2	Dimensional tolerances and squareness of panels	3
		5.2.1 Size	3
		5.2.2 Thickness	3
		5.2.3 Squareness and straightness	3
	5.3	Raw materials	3
		5.3.1 Wood veneer	3
		5.3.2 Other material	3
	5.4	Design and construction	3
	5.5	Performance requirements	4
		5.5.1 Structural performance	4
		5.5.2 Physical properties	4
		5.5.3 Durability performance	4
	5.6	Moisture content	8
6.	**Specimen Preparation and Testing**		
	6.1	General	9
	6.2	Qualification testing	9
		6.2.1 General	9
		6.2.2 Structural performance	9
		6.2.3 Physical properties	10
		6.2.4 Durability performance	11
	6.3	Product evaluation	12
		6.3.1 Mill specification	12
		6.3.2 Panel construction	12
		6.3.3 Mechanical properties	12
		6.3.4 Physical properties	12
		6.3.5 Adhesive bond properties	13
	6.4	Test methods	13
		6.4.1 Performance under concentrated static and impact loads	13
		6.4.2 Performance under uniform loads	14
		6.4.3 Wall performance under racking loads	14
		6.4.4 Fastener-holding performance	15

SECTION PAGE

6.4.5 Panel bending 16
6.4.6 Small specimen bending 17
6.4.7 Linear expansion and thickness swell measured from oven dry to vacuum-pressure soak 17
6.4.8 Linear expansion and thickness swell measured after wetting on one side 18
6.4.9 Linear and thickness expansion measured by exposure to relative humidity 18
6.4.10 Panel stability index 19
6.4.11 Panel moisture content 19
6.4.12 Panel thickness 19
6.4.13 Probe test for delamination 19
6.4.14 Moisture cycle for performance testing 20
6.4.15 Mold test 20
6.4.16 Bacteria test 21
6.4.17 Moisture cycle for quality assurance (single cycle test) 22
6.4.18 Moisture cycle for delamination and strength retention (six-cycle test) 22
6.4.19 Bond durability associated with knots and knotholes 22
6.4.20 Radial probe test 23

7. **Trademarking and Certification** 24

8. **Effective Date and Identification** 24

9. **History of Project** 25

10. **Standing Committee** 25

Appendix A 26

A1. Shipment Reinspection Practices 26
A1.1 General 26
A1.2 Request for reinspection 26
A1.3 Responsibility of the buyer 26
A1.4 Responsibility of the seller 26
A1.5 Cost and assistance 26
A1.6 Reinspection procedures and settlement 26
A1.6.1 Condition of panels 26
A1.6.2 Sampling for panel grade, size and thickness reinspections 26
A1.6.3 Panel grade, size and thickness reinspections . 26
A1.6.4 Sampling for bond quality, bond durability associated with knots and knotholes, structural performance or physical properties reinspections 27
A1.6.5 Bond quality reinspections 27

SECTION		PAGE

A1.6.6 Reinspection for bond durability associated with knots and knotholes 27
A1.6.7 Structural performance reinspections 27
A1.6.8 Physical property reinspections 27

VOLUNTARY PRODUCT STANDARD PS 2-92 PERFORMANCE STANDARD FOR WOOD-BASED STRUCTURAL-USE PANELS

Approved August 27, 1992. (See section 8.)

(This standard, initiated by the American Plywood Association, has been developed under the *Procedures for the Development of Voluntary Product Standards* for the U.S. Department of Commerce.)

1. SCOPE

1.1 This Voluntary Product Standard establishes requirements for assessing the acceptability of wood-based structural-use panels for construction sheathing and single-floor applications and provides a basis for common understanding among the producers, distributors, and the users of these products.

1.2 This Standard covers the performance requirements, adhesive bond durability, panel construction and workmanship, dimensions and tolerances, marking and moisture content of structural-use panels.

1.3 It also includes test methods to determine compliance, and a glossary of trade terms and definitions. A quality certification program is provided whereby qualified testing agencies inspect, sample, and test products for qualification under this Standard. Information regarding reinspection practices is provided in Appendix A.

1.4 This Voluntary Product Standard incorporates the International System of Units (SI) as well as customary units of measurement. In conversion of customary units where exact placement is not an issue, such as nail spacing, approximate conversions to SI units are made to yield more easily recognizable numbers. In critical matters, such as panel thickness, exact conversions to SI units are made. For nominal customary units, actual dimensions in SI units are given. The values given in SI units are the standard. The values given in parentheses are for information only.

1.5 Advisory notes in this Standard shall not be considered mandatory.

2. TERMINOLOGY

2.1 All-veneer panel—A conventional plywood panel with alternate layers of veneer running perpendicular to one another.

2.2 Composite panel—Any panel containing a combination of veneer and wood-based material.

2.3 Control value—The numerical limit established for the mill specification for a given mechanical or physical property.

2.4 Delamination—For plywood, a visible separation between plies that had received glue at their interface and had been firmly contacted in the pressing operation. Wood characteristics, such as checking, leafing, splitting and broken grain, are not to be construed as delamination.

(a) For purpose of reinspection of Exposure 1 panels, delamination is visible separation in any glueline that exceeds 19.4 cm^2 (3 square inches) except where directly attributable to defects permitted in the grade as follows:

Delamination associated with:

— Knots and knotholes—not to exceed the size of the defect plus a surrounding band not wider than 19 mm (3/4 inch).
— All other forms of permissable defects—not to exceed the size of the defect.

(b) For purposes of evaluation of Exterior panels, delamination is visible separation at a single glueline that exceeds 19.4 cm^2 (3 square inches) in an area coinciding with open knotholes, pitch pockets, splits, and gaps and other voids or characteristics permitted in the panel grade.

2.5 Major panel axis—The axis placed across supports according to the span rating, which is generally the long dimension of a panel.

2.6 Mat-formed panel—Any wood-based panel which does not contain veneer, consistent with the definition of structural-use panels, including products such as waferboard and oriented strand board.

2.7 Mill specification—The document which indicates certain manufacturing characteristics that contribute to product quality and consistency. The mill specification is unique to each qualified product of a given grade. The specification is used in the mill quality control program as audited under third-party inspection.

2.8 Performance standard—A standard for trademarked products based on performance. Performance is measured by tests that approximate end-use conditions.

2.9 PS 1—Voluntary Product Standard PS 1-83 "Construction and Industrial Plywood."

2.10 Sample—A lot of specimens cut from one or several panels and analyzed together for any of the standard performance criteria.

2.11 Sample mean—The average test value, obtained by summing the observations and dividing by the number of tests.

2.12 Sample standard deviation—A measure of test variation. Calculated as:

$$S = \sqrt{\frac{\Sigma x^2 - \frac{(\Sigma x)^2}{n}}{n-1}}$$

where:
S = sample standard deviation
x = test observation
n = number of observations

2.13 Shop-cutting panel—A panel which has been rejected as not conforming to a panel grade because of deficiencies, other than adhesive bond quality, which prevent it from meeting the requirements of this Standard. Such a panel shall be identified with a separate mark as specified in 7.2.1. Blistered panels shall not be considered as coming within the category of "shop-cutting" panels.

2.14 Span rating—An index number, based on customary inch units, that identifies the recommended maximum center-to-center support spacing for the specified end use under normal use conditions.

2.15 Specimen—The individual test piece.

2.16 Stability—A panel's ability to remain flat during normal exposure to weather during construction and while in service.

2.17 Stability index—A numerical index which is an indication of a panel's ability to remain flat when installed according to the manufacturer's specifications.

2.18 Structural-use panel—A panel product composed primarily of wood which, in its commodity end use, is essentially dependent upon certain mechanical and/or physical properties for successful end-use performance. Such a product carrying the trademark of a qualified inspection and testing agency shall conform to one or more of the end-use performance requirements contained herein and, where applicable, approved by one or more national regulatory agencies for single-layer floors or for sheathing with respect to roofs, subfloors, and walls. Such a panel shall be identified in a manner clearly conveying its intended end use.

2.19 Test exposure condition—The exposure condition to which a panel is subjected prior to test.

3. REFERENCE PUBLICATIONS

3.1 ASTM standards[1]—

- E-72-80 Method for Conducting Strength Tests of Panels for Building Construction
- E-661-88 Test Method for Performance of Wood and Wood-Based Floor and Roof Sheathing Under Concentrated Static and Impact Loads
- D-1037-89 Method for Evaluating the Properties of Wood-Base Fiber and Particle Panel Materials
- D-1761-88 Method of Testing Mechanical Fasteners in Wood
- D-3043-87 Methods of Testing Structural Panels in Flexure
- D-4442-92 Test Methods for Direct Moisture Content Measurement of Wood and Wood-Base Materials

[1] Copies of these publications are available from ASTM, 1916 Race Street, Philadelphia, PA 19103.

3.2 Other documents—

- PS 1-83 Voluntary Product Standard — Construction and Industrial Plywood[2]
- CAN/CSA-O325.0-92 Construction Sheathing[3]

4. CLASSIFICATION

4.1 General—The structural-use panels covered by this Standard are classified by exposure durability and by grade.

4.1.1 Exposure durability—Structural-use panels covered by this Standard are classified as a function of raw material composition and adhesive bond durability as provided in the following subsections.

4.1.1.1 Exterior—Panels that are suitable for permanent exposure to weather or moisture.

4.1.1.2 Exposure 1—Panels that are suitable for uses not permanently exposed to the weather, but where exposure durability to resist effects of moisture due to construction delays, high humidity, water leakage, or other conditons of similar severity, is required.

4.1.1.3 Exposure 2—Panels that are suitable for interior use where exposure durability to resist effects of high humidity and water leakage is required.

4.1.2 Grade—This Standard covers grades of structural-use panels designed and manufactured for sheathing, Structural I sheathing, and single-floor applications.

4.1.2.1 Sheathing—A wood-based structural-use panel intended for use in construction applications as covering material for roofs, subfloors, and walls when fastened to supports spaced in accordance with the span rating.

4.1.2.2 Structural I Sheathing—A wood-based structural-use panel similar to that described in 4.1.2.1, except that Structural I panels meet additional requirements in this Standard for cross-panel strength and stiffness and for racking shear.

4.1.2.3 Single Floor—A wood-based structural-use panel intended for use as combination subfloor and underlayment when fastened to supports spaced in accordance with the span rating.

5. REQUIREMENTS

5.1 General—All structural-use panels represented as conforming to this Standard shall meet or exceed all applicable requirements set forth herein. Test methods are given in Section 6. All terms shall be as defined in Section 2. Requirements for trade-marking and certification shall be as given in Section 7.

5.2 Dimensional tolerances and squareness of panels

5.2.1 Size—A tolerance of plus 0, minus 3.2 mm (1/8 inch) shall be allowed on specified length and/or width.

5.2.2 Thickness—A tolerance of plus or minus 0.8 mm (1/32 inch) shall be allowed on the trademark-specified thickness unless a closer tolerance is determined through qualification testing.

5.2.3 Squareness and straightness—Panels shall be square within 1.3 mm per lineal meter (1/64 inch per lineal foot) measured along the diagonals. All panels shall be manufactured so that a straight line drawn from one corner to the adjacent corner is within 1.6 mm (1/16 inch) of the panel edge.

5.3 Raw materials

5.3.1 Wood veneer—Any wood veneer used as a component of a panel shall be in accordance with the applicable veneer grade and workmanship requirements of Voluntary Product Standard PS 1.

ADVISORY NOTE: Canadian Standard CAN/CSA-O325.0, which is the Canadian counterpart to PS 2, limits maximum size of knots and knotholes to 76 mm (3 inches) as measured across the grain.

5.3.2 Other material—Other raw materials used in panel manufacture shall include particles or fiber produced by breaking down solid wood.

5.4 Design and construction—Panels qualifying for a span rating are identified in three classes: all-veneer panels, composite panels, or mat-formed

[2]Later issues of Voluntary Product Standard PS 1 shall be permitted providing the requirements are applicable and consistent with the issue designated. Copies of this standard are available from the Superintendent of Documents, U.S. Government Printing Office, Washington, DC 20402 and the National Technical Information Service, 5285 Port Royal Road, Springfield, VA 22161.

[3]Copies of this publication are available from the Canadian Standards Association, 178 Rexdale Boulevard, Rexdale (Toronto), Ontario, Canada M9W 1R3.

panels. See Section 2 for definitions of terms. Panels shall qualify on an individual panel construction basis for the grade and span rating upon demonstrated conformance to the appropriate requirements of 5.5.

5.5 Performance requirements—Structural-use panels to be trademarked in accordance with this Standard shall pass performance criteria established in three areas: structural performance, physical properties and adhesive bond durability. Performance requirements listed in 5.5.1, 5.5.2 and 5.5.3 are for all grades of structural-use panels except where noted otherwise.

5.5.1 Structural performance—Panels shall meet the performance requirements of 5.5.1.1 through 5.5.1.4 when tested for each structural condition in accordance with the referenced test procedure. Section 6 details specimen requirements and retest procedures.

5.5.1.1 Concentrated loads—Panels shall be tested according to the procedures of 6.4.1 for concentrated static and impact loads. Panels shall conform to the criteria of table 1 for the grade and span shown on the trademark.

Panels to be identified as Structural I Sheathing shall also be tested according to the procedures of 6.4.1 with the framing members parallel to the long panel dimension, except the load shall be applied at panel mid-length. Minimum test panel size shall be 1220 by 2440 mm (48 by 96 inches). The framing shall be spaced 610 mm (24 inches) on center (o.c.). The panel ends shall not be supported by framing. Panels shall conform to the criteria of table 1 for Roof-24. See 6.2.4.2 for additional testing requirements associated with knots and knotholes.

5.5.1.2 Uniform loads—Panels shall be tested according to the procedures of 6.4.2 for uniform loads. Panels shall conform to the criteria of table 2 for the grade and span shown on the trademark.

Panels to be identified as Structural I Sheathing shall also be tested according to procedures of 6.4.2 with the framing members parallel to the long panel dimension. Minimum test panel size shall be 1220 by 2440 mm (48 by 96 inches). The framing shall be spaced 610 mm (24 inches) o.c. The panel ends shall not be supported by framing. Panels shall conform to the criteria of table 3.

5.5.1.3 Wall racking—Sheathing panels which are rated for wall span 16 or 24 and for roof span 16, 20 or 24 shall be tested according to the procedures of 6.4.3 for wall racking. Panels shall conform to the criteria of table 4 for the thickness shown on the trademark.

Panels to be identified as Structural I Sheathing shall meet the Structural I Sheathing requirements of table 4 for the thickness shown on the trademark, when tested according to the procedures of 6.4.3.

5.5.1.4 Fastener holding—Panels shall be tested according to the procedures of 6.4.4 for fastener holding under lateral and withdrawal loads. Panels shall conform to the criteria of table 5 for the grade and thickness shown on the trademark.

5.5.2 Physical properties—Panels shall meet the performance requirements of 5.5.2.1 and 5.5.2.2 for each physical property when tested in accordance with the referenced test method. Section 6 details specimen requirements and retest procedures.

5.5.2.1 Linear expansion—Panels shall be tested according to one of the following linear expansion test procedures:

a. **Oven dry to vacuum-pressure soak**—Panels shall be tested according to the procedures of 6.4.7 for linear expansion from oven dry to vacuum-pressure soak. The linear expansion shall be no more than 0.50 percent as measured between the brass eyelets.

b. **One-sided wetting and relative humidity**—Panels shall be tested according to the procedures of 6.4.8 for linear expansion and thickness expansion (Single Floor only) as measured by one-sided wetting and 6.4.9 for linear and thickness expansion (Single Floor only) as measured by relative humidity exposures. The free panel linear expansion shall be no more than 0.30 percent along the major panel axis and 0.35 percent across the major panel axis. Thickness swell of Single Floor shall be no greater than 25 percent.

5.5.2.2 Stability—Panels shall be evaluated for the stability index according to 6.4.10. The stability index shall be 5.2 or greater (5.5 or greater for Single Floor) for the grade and span shown on the trademark.

5.5.3 Durability performance—Panels shall meet the performance requirements of 5.5.3.1 through 5.5.3.5 for properties that affect the adhesive bonding system when tested in accordance with the

Table 1. Concentrated static and impact test performance criteria for panels tested according to 6.4.1

End Use - Span Rating	Test Exposure Conditions[a]	Performance Requirement		
		Minimum Ultimate Load		Maximum Deflection Under 0.89 kN (200-lbf) Load
		Static	Following Impact[d]	
Roof - 16	Dry Wet	1.78 kN (400 lbf)	1.33 kN (300 lbf)	11.1 mm (0.438 in)[b][c]
Roof - 20	Dry Wet	1.78 kN (400 lbf)	1.33 kN (300 lbf)	11.9 mm (0.469 in)[b][c]
Roof - 24	Dry Wet	1.78 kN (400 lbf)	1.33 kN (300 lbf)	12.7 mm (0.500 in)[b][c]
Roof - 32	Dry Wet	1.78 kN (400 lbf)	1.33 kN (300 lbf)	12.7 mm (0.500 in)[b][c]
Roof - 40	Dry Wet	1.78 kN (400 lbf)	1.33 kN (300 lbf)	12.7 mm (0.500 in)[b][c]
Roof - 48	Dry Wet	1.78 kN (400 lbf)	1.33 kN (300 lbf)	12.7 mm (0.500 in)[b][c]
Roof - 54	Dry Wet	1.78 kN (400 lbf)	1.33 kN (300 lbf)	12.7 mm (0.500 in)[b][c]
Roof - 60	Dry Wet	1.78 kN (400 lbf)	1.33 kN (300 lbf)	12.7 mm (0.500 in)[b][c]
Subfloor - 16	Dry Wet/Redry	1.78 kN (400 lbf)	1.78 kN (400 lbf)	4.8 mm (0.188 in)[b]
Subfloor - 20	Dry Wet/Redry	1.78 kN (400 lbf)	1.78 kN (400 lbf)	5.6 mm (0.219 in)[b]
Subfloor - 24	Dry Wet/Redry	1.78 kN (400 lbf)	1.78 kN (400 lbf)	6.4 mm (0.250 in)[b]
Subfloor - 32	Dry Wet/Redry	2.45 kN (550 lbf)	1.78 kN (400 lbf)	5.3 mm (0.207 in)[b]
Subfloor - 48	Dry Wet/Redry	2.45 kN (550 lbf)	1.78 kN (400 lbf)	8.0 mm (0.313 in)[b]
Single Floor - 16	Dry Wet/Redry	2.45 kN (550 lbf)	1.78 kN (400 lbf)	2.0 mm (0.078 in)[e]
Single Floor - 20	Dry Wet/Redry	2.45 kN (550 lbf)	1.78 kN (400 lbf)	2.4 mm (0.094 in)[e]
Single Floor - 24	Dry Wet/Redry	2.45 kN (550 lbf)	1.78 kN (400 lbf)	2.7 mm (0.108 in)[e]
Single Floor - 32	Dry Wet/Redry	3.11 kN (700 lbf)	1.78 kN (400 lbf)	2.2 mm (0.088 in)[e]
Single Floor - 48	Dry Wet/Redry	3.11 kN (700 lbf)	1.78 kN (400 lbf)	3.4 mm (0.133 in)[e]

(a) Wet/redry shall be exposure to three days of continuous wetting, followed by testing dry. Wet conditioning shall be exposure to three days of continuous wetting, then tested wet. Dry shall be as received or conditioned in accordance with ASTM E-661.
(b) Criteria apply under static concentrated load according to 6.4.1. They do not apply following impact.
(c) Deflection after wet conditioning not applicable.
(d) Impact shall be 102 N•m (75 lbf•ft) for span ratings up to 24, 122 N•m (90 lbf•ft) for 32, 163 N•m (120 lbf•ft) for 40, and 203 N•m (150 lbf•ft) for 48 and greater.
(e) Criteria apply under static concentrated load and following impact according to 6.4.1.

Table 2. Uniform load performance criteria for panels tested according to 6.4.2

End Use - Span Rating	Test Exposure Conditions[b]	Performance Requirement	
		Average Deflection Under Load	Minimum Ultimate Uniform Load
Wall - 16	Dry	(d)	3.6 kPa (75 lbf/ft^2)[c]
Wall - 24	Dry	(d)	3.6 kPa (75 lbf/ft^2)[c]
Roof - 16[a]	Dry	1.7 mm at 1.68 kPa (0.067 in at 35 lbf/ft^2)	7.2 kPa (150 lbf/ft^2)
Roof - 20[a]	Dry	2.0 mm at 1.68 kPa (0.080 in at 35 lbf/ft^2)	7.2 kPa (150 lbf/ft^2)
Roof - 24[a]	Dry	2.5 mm at 1.68 kPa (0.100 in at 35 lbf/ft^2)	7.2 kPa (150 lbf/ft^2)
Roof - 32	Dry	3.4 mm at 1.68 kPa (0.133 in at 35 lbf/ft^2)	7.2 kPa (150 lbf/ft^2)
Roof - 40	Dry	4.2 mm at 1.68 kPa (0.167 in at 35 lbf/ft^2)	7.2 kPa (150 lbf/ft^2)
Roof - 48	Dry	5.1 mm at 1.68 kPa (0.200 in at 35 lbf/ft^2)	7.2 kPa (150 lbf/ft^2)
Roof - 54	Dry	5.7 mm at 1.68 kPa (0.225 in at 35 lbf/ft^2)	7.2 kPa (150 lbf/ft^2)
Roof - 60	Dry	6.4 mm at 1.68 kPa (0.250 in at 35 lbf/ft^2)	7.2 kPa (150 lbf/ft^2)
Subfloor - 16	Dry Wet/Redry	1.1 mm at 4.79 kPa (0.044 in at 100 lbf/ft^2)	15.8 kPa (330 lbf/ft^2)
Subfloor - 20	Dry Wet/Redry	1.3 mm at 4.79 kPa (0.053 in at 100 lbf/ft^2)	15.8 kPa (330 lbf/ft^2)
Subfloor - 24	Dry Wet/Redry	1.7 mm at 4.79 kPa (0.067 in at 100 lbf/ft^2)	15.8 kPa (330 lbf/ft^2)
Subfloor - 32	Dry Wet/Redry	2.2 mm at 4.79 kPa (0.088 in at 100 lbf/ft^2)	15.8 kPa (330 lbf/ft^2)
Subfloor - 48	Dry Wet/Redry	3.4 mm at 3.83 kPa (0.133 in at 80 lbf/ft^2)	10.8 kPa (225 lbf/ft^2)
Single Floor - 16	Dry Wet/Redry	1.1 mm at 4.79 kPa (0.044 in at 100 lbf/ft^2)	15.8 kPa (330 lbf/ft^2)
Single Floor - 20	Dry Wet/Redry	1.3 mm at 4.79 kPa (0.053 in at 100 lbf/ft^2)	15.8 kPa (330 lbf/ft^2)
Single Floor - 24	Dry Wet/Redry	1.7 mm at 4.79 kPa (0.067 in at 100 lbf/ft^2)	15.8 kPa (330 lbf/ft^2)
Single Floor - 32	Dry Wet/Redry	2.2 mm at 4.79 kPa (0.088 in at 100 lbf/ft^2)	15.8 kPa (330 lbf/ft^2)
Single Floor - 48	Dry Wet/Redry	3.4 mm at 3.83 kPa (0.133 in at 80 lbf/ft^2)	10.8 kPa (225 lbf/ft^2)

(a) Panels with Roof - 16 and Roof - 20 rating shall also meet performance requirements for Wall - 16 rating. Panels with Roof - 24 rating shall also meet requirements for Wall - 24 rating.
(b) Wet/redry shall be exposure to three days of continuous wetting, followed by testing dry. Dry shall be as received or conditioned in accordance with ASTM E-661.
(c) The major panel axis shall be placed along the supports for testing.
(d) Not applicable.

Table 3. Uniform load performance criteria for Structural I Sheathing panels tested according to 6.4.2

Nominal Thickness	Test Exposure Conditions[a]	Performance Requirements	
		Average Deflection Under Load	Minimum Ultimate Uniform Load
11.1 mm (7/16 in)	Dry	2.5 mm at 0.96 kPa (0.100 in at 20 lbf/ft^2)	4.3 kPa (90 lbf/ft^2)
11.9 mm (15/32 in)	Dry	2.5 mm at 1.68 kPa (0.100 in at 35 lbf/ft^2)	6.5 kPa (135 lbf/ft^2)
12.7 mm (1/2 in)	Dry	2.5 mm at 1.92 kPa (0.100 in at 40 lbf/ft^2)	7.2 kPa (150 lbf/ft^2)
15.1 & 15.9 mm (19/32 & 5/8 in)	Dry	2.5 mm at 3.35 kPa (0.100 in at 70 lbf/ft^2)	11.5 kPa (240 lbf/ft^2)
18.3 & 19.1 mm (23/32 & 3/4 in)	Dry	2.5 mm at 4.31 kPa (0.100 in at 90 lbf/ft^2)	14.4 kPa (300 lbf/ft^2)

(a) Dry shall be as received or conditioned in accordance with ASTM E-661.

Table 4. Racking load performance criteria for panels tested according to 6.4.3

Minimum Nominal Panel Thickness	Test Exposure Conditon[b]	Nail Size (Common)	Nail Spacing		Test Load		Performance Requirements[a]		
								Minimum Ultimate Load	
			Panel Edge	Intermediate Studs[c]	Sheathing	Structural I	Maximum Deflection Test Load	Sheathing	Structural I
Less than 7.9 mm (5/16 in)	Dry	51 mm (6d)	150 mm (6 in)	300 mm (12 in)	2.2 kN/m (150 lbf/ft)	——	5.1 mm (0.2 in)	9.5 kN/m (650 lbf/ft)	——
					4.4 kN/m (300 lbf/ft)	——	15.2 mm (0.6 in)		
7.9 mm (5/16 in)	Dry	51 mm (6d)	75 mm (3 in)	300 mm (12 in)	5.1 kN/m (350 lbf/ft)	——	5.1 mm (0.2 in)	14.3 kN/m (980 lbf/ft)	——
9.5 mm (3/8 in)	Dry	64 mm (8d)	75 mm (3 in)	300 mm (12 in)	6.0 kN/m (410 lbf/ft)	6.7 kN/m (460 lbf/ft)	5.1 mm (0.2 in)	16.8 kN/m (1150 lbf/ft)	18.8 kN/m (1290 lbf/ft)
11.1 mm (7/16 in)	Dry	64 mm (8d)	75 mm (3 in)	300 mm (12 in)	6.6 kN/m (450 lbf/ft)	7.4 kN/m (505 lbf/ft)	5.1 mm (0.2 in)	18.4 kN/m (1260 lbf/ft)	20.7 kN/m (1415 lbf/ft)
11.9 mm (15/32 in) and greater	Dry	76 mm (10d)	75 mm (3 in)	300 mm (12 in)	8.8 kN/m (600 lbf/ft)	9.7 kN/m (665 lbf/ft)	5.1 mm (0.2 in)	24.5 kN/m (1680 lbf/ft)	27.1 kN/m (1860 lbf/ft)

(a) Stud spacing—405 mm (16 in) o.c. for Wall-16, Wall-20, Roof-16 and Roof-20.
610 mm (24 in) o.c. for all other span ratings and all Structural I Sheathing panels.
(b) Dry shall be as received or conditioned in accordance with ASTM E-661.
(c) For studs spaced 610 mm (24 in) o.c., nail spacing on intermediate studs shall be 150 mm (6 in) o.c. for panels 11.1 mm (7/16 in) and thinner.

referenced test method. Section 6 details specimen requirements and retest procedures.

5.5.3.1 Bond durability—Structural-use panels shall meet the bond requirements listed below for their respective exposure durability classification.

a. **Exterior**—Panels composed entirely of veneer and rated as Exterior shall meet PS-1 bond requirements for Exterior panels.

b. **Exposure 1**—Panels composed entirely of veneer and rated as Exposure 1 shall meet PS-1 bond requirements for Exposure 1. Composite panels which are so rated shall satisfy the delamination requirements of Section 6 when tested in accordance with 6.4.13, following moisture cycling according to 6.4.18. Mat-formed panels and wood-based material for composite panels which are so rated shall exhibit a minimum average strength retention of 50 percent with no individual panel retained strength less than 40 percent when tested in accordance with 6.4.6 following moisture cycling according to 6.4.18.

Table 5. Fastener performance criteria under lateral and withdrawal loads for panels tested according to 6.4.4

					Performance Requirements for Minimum Ultimate Load	
Grade	End Use	Panel Thickness	Nail Size[a]	Test Exposure Condition[c]	Lateral	Withdrawal
Sheathing	Wall	Through 12.7 mm (1/2 in)	51 mm (6d)	Dry	534 N (120 lbf)	(b)
		Greater than 12.7 mm (1/2 in)	64 mm (8d)	Wet/Redry	400 N (90 lbf)	(b)
	Roof	Through 12.7 mm (1/2 in)	51 mm (6d)	Dry	534 N (120 lbf)	89N (20 lbf)
		Greater than 12.7 mm (1/2 in)	64 mm (8d)	Wet/Redry	400 N (90 lbf)	67 N (15 lbf)
	Subfloor	Through 12.7 mm (1/2 in)	51 mm (6d)	Dry	934 N (210 lbf)	89 N (20 lbf)
		Greater than 12.7 mm (1/2 in)	64 mm (8d)	Wet/Redry	712 N (160 lbf)	67 N (15 lbf)
Single Floor	Floor	Through 12.7 mm (1/2 in)	51 mm (6d)	Dry	934 N (210 lbf)	89 N (20 lbf)
		Greater than 12.7 mm (1/2 in)	64 mm (8d)	Wet/Redry	712 N (160 lbf)	67 N (15 lbf)

(a) Common smooth-shank nail.
(b) Not applicable.
(c) Wet/redry shall be exposure to three days of continuous wetting, followed by testing dry. Dry shall be as received or conditioned in accordance with ASTM E-661.

c. **Exposure 2**—Panels composed entirely of veneer and rated as Exposure 2 shall meet PS-1 bond requirements for Interior panels bonded with intermediate glue. Composiite and mat-formed panels which are so rated shall be moisture cycled according to the procedures of 6.4.14. Following moisture cycling, all of the appropriate structural performance criteria provided in 5.5.1 except 5.5.1.3 shall be satisified for the span and grade to be noted on the trademark.

5.5.3.2 Bond durability associated with knots and knotholes—Structural-use panels composed entirely of veneer rated as Exposure 1 shall satisfy the requirements of 6.2.4.2 when tested in accordance with 6.4.19 and 6.4.20.

5.5.3.3 Mold resistance—Panels shall satisfy the mold resistance test according to the procedures of 6.4.15 as defined by Section 6. Panels bonded with phenolic or isocyanate-based adhesives have demonstrated resistance to attack from mold and shall be considered as meeting this requirement.

5.5.3.4 Resistance to elevated temperature—Panels shall be considered to satisfy sufficient elevated-temperature resistance (71 °C [160 °F]) when they meet the requirements of 5.5.3.1.

5.5.3.5 Bacteria resistance—Panels shall satisfy the bacteria test according to the procedures of 6.4.16 as defined by Section 6. Panels bonded with phenolic or isocyanate-based adhesives have demonstrated resistance to attack from bacteria and shall be considered as meeting this requirement.

5.6 Moisture content—Moisture content of panels at time of shipment shall not exceed 18 percent of oven-dry weight as determined by 6.4.11.

6. SPECIMEN PREPARATION AND TESTING

6.1 General—Acceptance of structural-use panel products is based upon performance testing reflecting attributes which are consistent with panel grade requirements. Panels shall be able to sustain the structural requirements of construction and/or occupancy, maintain bond integrity during normal exposure, and remain relatively stable during expected moisture exposure. This section details test specimen requirements, conformance criteria, retest options, product evaluation requirements and test methods.

6.2 Qualification testing

6.2.1 General—Qualification tests required depend upon the panel grade. Required tests and performance criteria are detailed in Section 5. Conformance criteria and retest requirements are given by test in this section.

Panels for qualification testing shall be selected to represent minimum performance.

Tests shall be conducted according to the application specifications of the manufacturer and the use for which the panel is being qualified, at the support spacing to be shown on the trademark. Any special product modification which affects performance (e.g., moisturizing or water repellent treatment) shall be noted per 6.3.1.

Upon failure in initial qualification of a product, retest provisions shall be followed for one additional series of tests provided no change has been made in the manufacturing process. If a product satisfies the provisions of the retest, it shall pass the performance qualification test in question. If it does not, the product shall fail the performance qualification test. If a change in panel configuration or processing has been made, additional qualification tests shall be performed when required by the qualified testing agency.

6.2.2. Structural performance

6.2.2.1 Concentrated loads—A minimum of 10 tests (specimens taken from at least five panels) for each test exposure condition shall be evaluated for both concentrated static and impact loads according to 6.4.1.

a. **Deflection**—At least 90 percent of tests shall deflect no more than the specified (table 1) maximum.

   Retest—If no more than two tests in a lot of 10 fail to meet the deflection requirements, another lot of 10 tests (specimens taken from at least five panels) for that requirement shall be permitted. If no more than one test fails in this second round of testing, the requirements shall be considered satisfied.

b. **Ultimate load**—For each lot, 100 percent of tests shall support the specified (table 1) minimum ultimate load.

   Retest—If no more than one test in a lot of 10 fails to meet the minimum ultimate load requirement, another lot of 10 tests (specimens taken from at least five panels) for that requirement shall be permitted. If all pass the retest, the requirements shall be considered satisfied.

6.2.2.2 Uniform loads—A minimum of 10 tests (specimens taken from at least five panels) for each test exposure condition shall be evaluated for uniform-load capacity according to 6.4.2.

a. **Deflection**—The average deflection shall not be greater than that specified (tables 2 and 3).

   Retest—If the average deflection is greater than specified, but does not exceed the requirement by 20 percent, another lot of 10 tests (specimens taken from at least five panels) for that requirement shall be permitted. If the average of the first and second lot taken together does not exceed that specified, the requirements shall be considered satisfied.

b. **Ultimate load**—For each lot, 100 percent of tests shall support the specified (tables 2 and 3) minimum ultimate load.

   Retest—If no more than one test in a lot of 10 fails to meet the ultimate-load requirement, another lot of 10 tests (specimens taken from at least five panels) for that requirement shall be permitted. If all specimens pass this retest, the requirements shall be considered satisfied.

6.2.2.3 Wall racking—A minimum of two tests shall be evaluated for wall racking according to 6.4.3.

a. **Deflection**—The average deflection shall not be greater than that specified (table 4).

Retest—If the average deflection is greater than specified, but does not exceed the requirement by 20 percent, another wall test for that requirement shall be permitted. If the average of the three walls does not exceed that specified, the requirements shall be considered satisfied.

b. **Ultimate load**—For each lot, 100 percent of tests shall support the specified minimum ultimate load. If only two tests are evaluated, then values shall be within 10 percent of each other.

Retest—If the two test ultimate loads do not agree within 10 percent, another wall test for that requirement shall be permitted. If the lowest value of the three walls tested exceeds the specified minimum ultimate load, the requirements shall be considered satisfied.

6.2.2.4 Fastener holding—A minimum of 20 tests (specimens taken from at least five panels) for each test exposure condition and property shall be tested for lateral and withdrawal loads according to 6.4.4. Panel thickness shall be the intended trademark thickness.

a. **Ultimate load**—At least 95 percent of tests shall support the specified minimum ultimate load.

Retest—If no more than four tests in a lot of 20 fail to meet the minimum ultimate load requirement, another lot of 20 tests (specimens taken from at least five panels) for that requirement shall be permitted. If no more than one fails the retest, the requirements shall be considered satisfied.

6.2.3 Physical properties

6.2.3.1 Linear expansion—One of the following linear expansion test methods and associated criteria shall be satisfied as noted for the grade in Section 5. Any special feature included by the manufacturer, such as coatings or moisture conditioning, shall be stated for 6.3.1.

a. **Exposure to oven dry and vacuum-pressure soak**—A minimum of 10 tests (specimens taken from at least five panels) both along and across the major panel axis shall be conducted according to 6.4.7 for linear expansion measured from oven dry to vacuum-pressure soak.

At least 80 percent of specimens from each panel axis shall exhibit linear expansion, as measured between the brass eyelets from oven dry to soak, no greater than specified.

Retest—If no more than four tests in a lot of 10 fail to meet the maximum linear-expansion requirements for a given panel axis, another lot of 10 tests (specimens taken from at least five panels) for that requirement shall be permitted. If no more than two fail in this second round of testing, the requirements shall be considered satisfied.

b. **Exposure to one-sided wetting and relative humidity**—A minimum of 10 tests (specimens taken from at least five panels) for both along and across the major panel axis shall be conducted according to 6.4.8 for linear and/or thickness expansion measured from as-received to wet-one-side exposure. A minimum of 10 tests (specimens taken from at least five panels) for both along and across the major panel axis shall be conducted according to 6.4.9 for linear and/or thickness expansion measured when exposed to relative humidity change.

At least 80 percent of tests from each panel direction and test method shall exhibit a linear expansion no greater than specified.

Retest—If no more than four tests in a lot of 10 fail to meet the maximum linear-expansion requirements for a given panel axis and test exposure condition, another lot of 10 tests (specimens taken from at least five panels) for that requirement shall be permitted. If no more than two fail in this second round of testing, the requirements shall be considered satisfied.

6.2.3.2 Stability—A minimum of 10 tests (specimens taken from at least five panels) both along and across the major panel axis shall be conducted to determine the panel's stability index according to the procedures of 6.4.10.

At least 80 percent of tests from each panel direction shall exhibit a minimum stability index no less than the requirement for the grade and span.

Retest—If no more than four tests in a lot of 10 fail to meet the stability requirements, another lot of 10 tests (specimens taken from at least five panels) for that requirement shall be permitted. If no more than two fail in this second round, the requirements shall be considered satisfied.

6.2.4 Durability performance

6.2.4.1 Bond durability—Bond durability performance tests shall be conducted as follows:

a. **Exposure 1**—Panels composed entirely of veneer and rated as Exposure 1 shall satisfy PS-1 bond requirements for Exposure 1. Composite panels which are so rated shall have one sample from each of at least 20 panels tested according to 6.4.18 and evaluated for delamination according to 6.4.13 following the fourth and sixth moisture cycles. At least 95 percent of specimens shall pass four moisture cycles and 90 percent shall pass six moisture cycles. Mat-formed panels and wood-based material for composite panels which are so rated shall have one sample from each of at least 20 panels cycled according to 6.4.18 and tested for strength retention according to 6.4.6. Strength retention is calculated by the following method:

$$\% \text{ RS} = P_t/P_c \times 100$$

where % RS = Percent retained strength of sample

P_t = Average sample (five-specimen) breaking load after cycling.

P_c* = Average unexposed sample (five-specimen) breaking load.

* Control specimens are broken in the as-received condition.

Samples tested shall exhibit the specified minimum strength retention following six moisture cycles.[4]

Retest—For composite and mat-formed panels, if the 20-panel average strength retention meets the requirements but no more than one panel fails to meet the minimum individual panel strength retention specified, another lot of 20 tests (one sample from each of 20 panels) shall be permitted. For composite panels, if more than 85 percent but fewer than 90 percent of specimens pass delamination requirements following the six-cycle test of 6.4.18 and evaluated according to 6.4.13, one additional lot of 20 tests (one sample from each of 20 panels) shall be permitted. If the retest results meet the requirements, bond durability requirements shall be considered satisfied.

b. **Exposure 2**—Panels composed entirely of veneer and rated as Exposure 2 shall satisfy PS-1 bond requirements for Interior panels bonded with intermediate glue. Composite and mat-formed panels which are so rated shall be moisture cycled according to the procedures of 6.4.14. Structural tests required for the grade shall be evaluated according to the performance requirements of 6.2.2.

c. **Exterior**—Panels composed of veneer and rated as Exterior shall satisfy PS-1 bond requirements for Exterior panels.

6.2.4.2 Bond durability associated with knots and knotholes—Structural-use panels composed entirely of veneer and rated as Exposure 1 shall be tested according to 6.4.19 and 6.4.20. Knots and/or knotholes to be tested shall be greater than 51 mm (2 inches) but not exceeding 76 mm (3 inches) in width measured across the grain. Twenty knots and/or knotholes shall be tested according to 6.4.19 and 20 according to 6.4.20.

Knots and/or knotholes tested according to 6.4.19 shall meet dry concentrated static and impact requirements, conformance criteria and retest options of table 1 and 6.2.2.1(a) and 6.2.2.1(b). For each lot of 20, 95 percent of the knots and/or knotholes tested according to 6.4.20 shall not exhibit delamination extending radially more than 19 mm (3/4 inch) beyond the boundary of the knot or knothole and across the width of a full sector or the continuous equivalent of the width of a full sector as measured by 6.4.20.4.

Retest—If no more than two knots or knotholes in a lot of 20 fail to meet the test requirements, another lot of 20 tests for that requirement shall be permitted. If all specimens pass the retest, the requirements shall be considered satisfied.

6.2.4.3 Mold resistance—Four panels shall be tested according to the procedures of 6.4.15.

a. Panels composed entirely of veneer shall be considered to have satisfactory mold resistance if each test group over the 20-week period shows an average glueline shear load of at least 90 percent of the control. In addition, no more than two groups shall rate less than 80 percent and no single group shall rate less than 75 percent.

b. Other panels shall be considered to have satisfactory mold resistance if no test group average is less than the control sample mean minus 1.8 times the control sample standard deviation.

[4] Because of the extreme severity of the six-cycle test, the strength retention requirement relates to bond durability and does not relate to structural design values.

6.2.4.4 Resistance to elevated temperature— Panels satisfying the moisture-cycling requirements of Section 6.2.4.1 shall be considered to have satisfactory resistance to elevated temperature.

6.2.4.5 Bacteria resistance— At least four panels shall be tested according to procedures of 6.4.16.

a. Panels composed entirely of veneer shall be considered to have bacteria resistance if each test group over the 12-week test shows an average load of at least 80 percent of the control. No single group shall rate below 70 percent of the control.

b. Other panels shall be considered to have satisfactory bacteria resistance if no test group average is less than the control sample mean minus 1.8 times the control sample standard deviation.

6.3 Product evaluation

6.3.1 Mill specification—If a product passes successfully the appropriate performance qualification tests of 6.2, a proprietary manufacturing specification unique to the product and mill shall be written based on product evaluation under this section, 6.3.

The product evaluation shall be based on the same lot supplied by the manufacturer for performance qualification testing. Control values (see definitions) established during product evaluation shall be the basis for quality evaluation of future production by both the individual mill quality control procedures and by an inspection program of a qualified inspection and testing agency (see 7.1.1) in conjunction with its policies.

In addition to the panel characteristics specifically evaluated in this section, any unique manufacturing techniques which influence product qualification shall be included in the individual mill manufacturing specification. This would include special coatings; heat, water or chemical treatments; overlays; additives; or other manufacturing-related activities. In addition, the maximum size knot or knothole tested according to 6.2.4.2 shall be included in the manufacturing specification.

6.3.2 Panel construction

6.3.2.1 All-veneer panels—Panels shall be defined as to species and veneer construction for the mill specification and evaluated under 6.3.3 and 6.3.4 but excluding 6.3.4.2.

6.3.2.2 Composite panels—Wood-based material shall be evaluated as required in 6.3.3, 6.3.4.1 and 6.3.5. In addition, the finished (veneered) panel shall be evaluated by the provisions of 6.3.3, 6.3.4.1, 6.3.4.3 and 6.3.5.

6.3.2.3 Mat-formed panels—Mat-formed panels shall be evaluated under the provisions of 6.3.3, 6.3.4 and 6.3.5.

6.3.3 Mechanical properties

6.3.3.1 Bending stiffness—Twenty tests (specimens taken from at least 10 panels) shall be evaluated for bending stiffness both along and across the major panel axis according to the procedures of 6.4.5. Control values for each panel direction shall be the sample mean, and the minimum shall be the lower value of a 90 percent confidence interval established on the mean.

6.3.3.2 Bending strength—Ten tests (specimens taken from at least 10 panels) shall be evaluated for maximum bending moment both along and across the major panel axis according to the procedures of 6.4.5. The control value for each panel direction shall be the minimum observed value, or the sample mean minus 1.8 times the sample standard deviation, whichever is the higher value.

6.3.4 Physical properties

6.3.4.1 Panel thickness—Finished panel thickness shall be evaluated on each of 20 panels by the procedures of 6.4.12. The control value shall be the observed minimum individual panel average. The trademark shall include the minimum nominal fractional thickness rounded up to the nearest 0.8 mm (1/32 inch).

6.3.4.2 Moisture content—Panel moisture content shall be measured on one specimen from each of 20 panels according to 6.4.11. The control value shall be the maximum panel moisture content. A control value shall be established only if necessary under linear expansion performance testing per 6.2.3.1.

6.3.4.3 Linear expansion—Linear expansion shall be evaluated for specimens taken from 20 panels by the procedures of 6.4.7. For composite panels and for mat-formed panels containing non-oriented furnish, one specimen 75 by 300 mm (3 by 12 inches) shall be prepared perpendicular to the major panel axis only from each panel to be tested. For mat-formed panels containing oriented furnish, one 75- by 300-mm (3- by 12-inch) specimen parallel and one perpendicular to the major panel axis shall be prepared from each panel to be tested. The control value shall be the highest observed value, or the sample average plus 1.8 times the sample standard deviation, whichever is the lower value. When mat-formed panels contain oriented furnish, separate parallel and perpendicular control values shall be determined.

6.3.5 Adhesive bond properties

6.3.5.1 Moisture cycled breaking load—For composite and mat-formed panels classified Exposure 1 and Exposure 2, a minimum of 20 samples, one taken from each of 20 panels, shall be moisture cycled according to the procedures of 6.4.17 (single cycle soak-dry test) using specimens described in 6.4.6. For composite and mat-formed panels classified Exposure 1, a minimum of 20 samples, one taken from each of 20 panels, shall be moisture cycled according to the procedures of 6.4.18 (6-cycle test) using specimens described in 6.4.6. Immediately following moisture cycling, panels containing veneer shall be examined for delamination of veneer-to-veneer or veneer-to-other-wood-based materials according to 6.4.13. At least 95 percent of the specimens tested shall exhibit no delamination, as defined in 6.4.13. Moisture-cycled samples shall then be tested according to the procedures of 6.4.6. The individual panel control value for each qualificaton shall be the lowest observed breaking load (5-specimen average), or the sample average minus 1.8 times the sample standard deviation, whichever is the higher value. In addition, for Exposure 1 panels tested according to 6.4.17 and 6.4.6, the lower 90 percent confidence interval shall be established on the qualification mean.

6.3.5.2 Exposure 1 bond durability of all-veneer panels—Control values for bond durability of Exposure 1 all-veneer panels shall be as specified in 6.2.4.1(a).

6.3.5.3 Bond durability associated with knots and knotholes—Control values for bond durability associated with knots and knotholes shall be as specified in 6.2.4.2 for knots and knotholes tested according to 6.4.20.

ADVISORY NOTE: Assessment of bond durability associated with knots and knotholes on a quality auditing basis should be conducted when a maximum-sized knot or knothole appears in the routine bond durability samples. When available, they should be tested according to 6.4.20 and meet the criteria of 6.2.4.2.

6.4 Test methods

6.4.1 Performance under concentrated static and impact loads

6.4.1.1 General—The general provisions of the most recent edition of ASTM E-661 shall be followed.

6.4.1.2 Specimen preparation—ASTM E-661 shall be followed with regard to specimen preparation and 6.2 shall be followed with regard to the number of specimens required. Specimens shall also be moisture cycled as required.

6.4.1.3 Test procedure

Concentrated static—Procedures of ASTM E-661 shall be followed, except that a test frame of steel rather than lumber, using fasteners which simulate nails, shall be permitted. During measurement of deflection, the loading rate shall be 445 N (100 lbf) per 30 seconds. Following measurement of deflection, the rate of loading shall yield failure within 5 minutes if a hand-pumped hydraulic loading system is used.

Concentrated impact—Procedures of ASTM E-661 Method A shall be followed, except:

1) A test frame of steel rather than lumber, using fasteners which simulate nails, shall be permitted.

2) For span ratings greater than 24, the shot bag shall weigh 27 kg (60 pounds).

The width of individual test pieces shall be 610 mm (24 inches) for span ratings up to 24, and 1220 mm (48 inches) for greater span ratings.

6.4.2 Performance under uniform loads

6.4.2.1 General—This method covers a procedure for determining the performance of structural-use panels under uniform loads such as snow, wind and occupancy loads. The uniform load shall be applied by drawing a vacuum under the test specimen. This causes atmospheric pressure to apply a uniform load to the test specimen. The specimen shall be mounted on fully supported framing members in a vacuum chamber.

6.4.2.2 Equipment

Vacuum chamber—The vacuum chamber (fig. 1) shall consist of a sealed box with the panel to be tested forming the top. A 0.15-mm (6-mil) polyethylene sheet or equivalent, the perimeter of which shall be attached securely with tape, shall seal the top surface of the vacuum chamber. The chamber shall be strong and rigid to resist the applied load without failure or excessive deformation. A vacuum pump shall be used to reduce the air pressure under the specimen. The load shall be measured with absolute pressure gages for electronic data readout, but manometers or vacuum gages shall also be permitted.

Joist supports—The framing members shall be supported so as to resist deflection or rotation under applied load.

Deflection gages—The deflection gages shall be mounted to rigid tripods whose legs shall rest above the joists. Deflection shall be measured to the nearest 0.025 mm (0.001 inch).

6.4.2.3 Specimen preparation—Samples selected shall be representative of the product being tested.

Length—The specimen length perpendicular to the framing members shall be equal to twice the center-to-center spacing.

Width—The specimen width shall be at least 595 mm (23.5 inches).

Thickness—The specimen thickness shall be measured and recorded after conditioning.

Conditioning—Prior to testing, specimens shall be conditioned as specified in table 2.

6.4.2.4 Test procedure—Following preparation of specimens in 6.4.2.3, the specimen to be tested shall be mounted on framing members in the vacuum chamber at the spacing for which the panel is being rated, following the specified nail size and spacing. The top of the vacuum chamber shall then be sealed with the polyethylene sheet, and the tripod holding the deflection gages shall be set in its proper position with the gages positioned to read deflection at the point of maximum deflection[5] within the two outer spans (fig. 2).

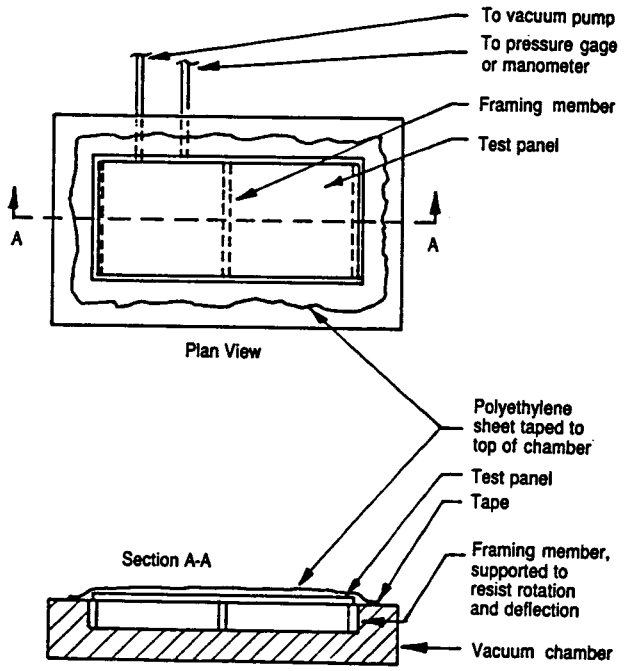

Figure 1. Vacuum chamber test equipment.

The panel shall be loaded at a uniform rate of 2.4 kPa (50 lbf/ft^2) per minute, recording deflections at 1.2 kPa (25 lbf/ft^2) increments until maximum load is achieved or until the desired proof load is achieved as required. Deflection data shall be required only in sufficient numbers to develop the straight line portion of the load-deflection curve. In no case shall the number of data points be less than six. Deflection at a given load shall be determined by translating the slope to pass through the origin, thereby correcting for any settling of the system.

6.4.3 Wall performance under racking loads

6.4.3.1 General—The general provisions of Sections 14 and 15 of ASTM E-72 for wall racking shall be followed.

[5] The point of maximum deflection for a uniformly loaded two-span system occurs at 0.4215 times (S) measured from the centerline of the outer joist, where S equals the center-to-center joist spacing.

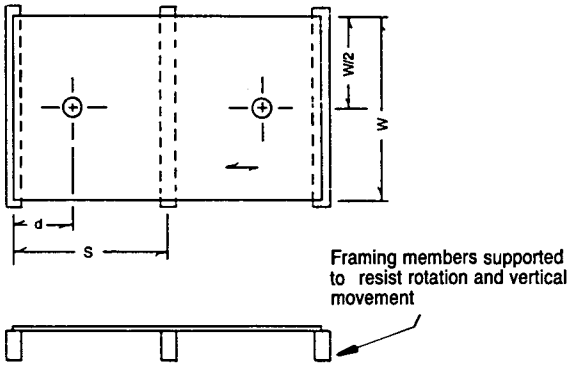

S = Center-to-center support spacing.
d = 0.4215(S) for two span.
W = Panel width, minimum = 595 mm (23.5 in).
⊕ = Location of deflection measurement.

Figure 2. Uniform load test specimens.

6.4.3.2 Specimen preparation—Test specimens shall be prepared as in ASTM E-72 except that the 89- by 89-mm (nominal 4- by 4-inch) timber attached to the upper plate shall be reinforced with a 100- by 150-mm (4- by 6-inch) steel tube to prevent excessive deformation. An additional vertical dial gage shall be positioned in the lower right corner of the wall (fig. 7, ASTM E-72) to record crushing of the lower plate.

Stud framing shall be Douglas-fir or southern pine stud grade, with a moisture content of 15% or less. Nail size and spacing shall be as specified in table 4. When 76-mm (10d) nails are used, 64-mm (nominal 3-inch) wide framing shall be used for the center stud (at panel joint) to prevent splitting of framing member.

Cleaned scaffold nails shall be permitted. Specimens shall be tested in the dry (as received) condition.

6.4.3.3 Test procedure—Deflection measurements shall be recorded as the wall is being loaded. At least 10 sets of uniformly spaced deflection readings shall be taken prior to failure to establish the load-deformation curve. At 1-times and 2-times the test load specified in table 4, the load shall be removed and the wall shall be allowed to recover for 5 minutes. At 2.5-times the test load, the dial gages shall be removed and the wall shall be loaded to failure.

Deflection shall be reported after removing panel uplift, base slip and crushing components from the total deflection measurement. Ultimate load shall be recorded.

6.4.4 Fastener-holding performance

6.4.4.1 General—Tests shall measure the single-shear resistance of a nail to lateral movement of the panel. The procedure shall generate data which are to be compared to data from other panel products, but the procedure shall not be used to produce joint design information.

Direct withdrawal loads shall also be measured.

6.4.4.2 Specimen preparation

Lateral loads—Each specimen shall measure 150 by 150 mm (6 by 6 inches). To serve as test points, four points shall be marked on the centerline of each specimen axis, 25 mm (1 inch) in from each edge. Nail size shall be as required.

Sheathing material shall be stored in a room having a controlled temperature of 20 ± 3 °C (68 ± 6 °F) and a controlled relative humidity at 65 ± 3 percent to bring it to constant weight. Constant weight is assumed when two consecutive readings taken at least 24 hours apart agree within 0.2 percent.

Nails shall be driven perpendicular to the face of the panel following conditioning. Nail penetration shall be such that the nail head lies flush with the panel face. A backing shall be used to prevent the nail from tearing away the back during driving. All nails shall be driven immediately prior to testing.

Direct withdrawal loads—Test specimens shall be of convenient size (at least 75 by 150 mm [3 by 6 inches]) trimmed from the lateral resistance specimens. Fifty-one-millimeter (6d) common nails shall be driven through the panel at right angels to the face and at least 12 mm (1/2 inch) of the shank portion shall project above the surface of the material.

Conditioning—Prior to testing, specimens shall be conditioned as specified in table 5.

6.4.4.3 Test procedure

Lateral loads—The fastener shall be loaded in single shear. Apparatus similar to that shown in figure 3 shall be employed. The nail shank shall be rigidly clamped. Rollers shall be present to insure vertical movement by providing lateral restraint to the panel. Load shall be applied through a yoke-type loading head. One such loading head is described in figure 3.

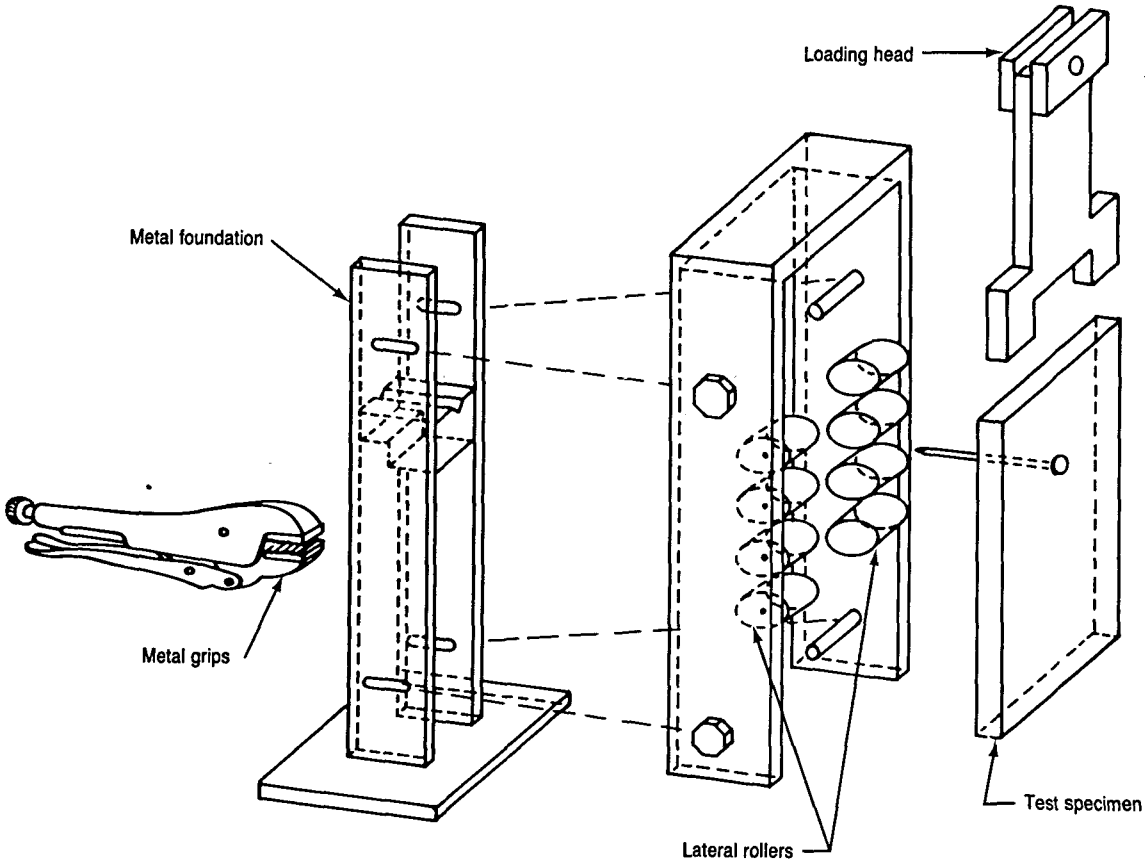

Figure 3. Exploded view of test apparatus for measuring the lateral nail-holding capacity of structural panel products.

The test specimen shall be loaded continuously throughout the test by uniform motion of the movable crosshead of the test machine at a rate of 5 mm (0.2 inch) per minute.

Direct withdrawal loads—Nail holding tests shall be made on nails driven through the thickness of the panel to measure the resistance to withdrawal in a plane normal to the face.

Method of loading shall be in accordance with ASTM D-1761, Section 10.2.

The specimen shall be loaded continuously throughout the test by uniform motion of the movable head of the testing machine at a rate of 5 mm (0.2 inch) per minute.

6.4.5 Panel bending

6.4.5.1 General—This test procedure provides basic data regarding full panel bending strength and stiffness. The general provisions of ASTM D-3043 Method C shall be followed.

6.4.5.2 Specimen preparation—Specimens shall be prepared according to ASTM D-3043 Method C, except specimen size shall be 1220- by 1220-mm (48- by 48-inch) half panels.

6.4.5.3 Test procedure—The procedures of ASTM D-3043 Method C shall be followed except specimens shall be tested for stiffness both along and across the major panel axis, and maximum bending moment shall be taken as required.

6.4.6 Small specimen bending

6.4.6.1 General—This test is intended to develop strength information which acts as a measure of bond integrity. The test shall be run on moisture cycled specimens.

6.4.6.2 Specimen preparation—Fifteen 25- by 125-mm (1- by 5-inch) test specimens shall be cut from each sample to be tested (15 from each direction in the case of panels which exhibit directional properties). Side-by-side matching shall be observed for comparison of Control, D-4 and D-5 exposures. Specimens prepared from panels containing veneer shall be cut with the grain of the veneer parallel to the 125-mm (5-inch) dimension. Specimens prepared from mat-formed panels shall be cut so that the 125-mm (5-inch) dimension of the specimens shall be parallel to the major panel axis except in the case of panels exhibiting directional properties, in which case five specimens shall be cut parallel and five perpendicular to the major panel axis. Specimens shall then be tested following appropriate conditioning.

6.4.6.3 Test procedure—Each specimen shall be tested as a beam across a 100-mm (4-inch) clear span with the loading head and supports measuring 19 mm (3/4 inch) in diameter. The load shall be applied at midspan at a rate not to exceed 25 mm (1 inch) per minute until failure occurs. Specimens from veneered composite panels shall be oriented so that the thickness of the specimen acts as the depth of the beam. Specimens from mat-formed panels shall be oriented so that the 25-mm (1-inch) cut dimension acts as the depth of the beam and the panel thickness acts as the beam width. The breaking load for each specimen shall be measured to ± 4.4 N (l lbf). The average breaking load for each panel shall be calculated. In the case of other panels which exhibit directional properties, separate averages shall be determined for each specimen direction. Average values shall be reported.

6.4.7 Linear expansion and thickness swell measured from oven dry to vacuum-pressure soak

6.4.7.1 General—This test method provides evaluation of a panel's dimensional stability.

6.4.7.2 Specimen preparation—Test specimens shall be cut at least 75 mm (3 inches) wide by at least 300 mm (12 inches) long. Specimens shall be selected to avoid large characteristics such as knotholes, knots, or splits in the outer veneers (when veneers are present), especially near the eyelet locations. Otherwise, normal grade features shall be included as they occur.

Brass eyelets placed in pre-bored holes or other fixed reference points which serve as measuring points on the centerline of each specimen shall be located 25 mm (1 inch) in from each end. Use of the reference measuring points shall permit determination of linear expansion independent of any additional swelling that might take place at the exposed panel edge.

Additionally, points shall be marked on the edges of each specimen for thickness swell evaluation. Thickness shall be measured according to 6.4.12, except as modified below.

6.4.7.3 Test procedure—Specimens shall be oven dried at 103 ± 2 °C (217 ± 4 °F) for 24 hours or until constant weight is attained. Constant weight shall be assumed when two consecutive readings taken at least 2 hours apart agree within 0.2 percent.

After drying, each specimen shall be wrapped in polyethylene and allowed to cool to approximately room temperature. The specimen shall then be placed in a flattening jig to remove any out-of-plane distortions, and the distance between gage points shall be measured to the nearest 0.025 mm (0.001 inch) with a bar-type trammel equipped with a dial gage.

At least two thickness measurements shall be made with a rachet-type micrometer to the nearest 0.025 mm (0.001 inch) with the anvil edge flush with the specimen edge. The micrometer shall be as described in 6.4.12.

Following the dry measurements, specimens shall be placed in a pressure cylinder, flooded with 18 ± 15 °C (65 ± 10 °F) tap water and subjected to a vacuum of 91 ± 7 kPa (27 ± 2 inches of mercury) for 1 hour (time shall not begin until full vacuum is achieved). Specimens shall then be subjected to 2 hours of pressure not to exceed 690 kPa (100 psi). After wet exposure, specimens shall be removed from the cylinder and remeasured for length and thickness.

Expansion values shall be calculated as a percentage of the original oven-dry dimension, as given in the equation below:

$$\text{Percent change} = \frac{L_w - L_d}{L_d} \times 100$$

where L_w = dimension saturated
L_d = dimension oven dry.

6.4.8 Linear expansion and thickness swell measured after wetting on one side

6.4.8.1 General—This performance test is designed to measure linear expansion and edge thickness swell.

6.4.8.2 Specimen preparation—Each 1220- by 1220-mm (48- by 48-inch) specimen shall have only one cut edge, the remaining three being as prepared by the manufacturer. To serve as measuring points for linear expansion, brass eyelets shall be placed in four pre-bored holes on the centerline of each specimen axis, 25 mm (1 inch) in from each edge. This shall result in a nominal 1170-mm (46-inch) gage distance both along and across the major panel axis.

Additionally, points shall be marked on each uncut side of the specimen for thickness swell evaluation. Thickness shall be measured according to 6.4.12.

Moisture content (oven-dry basis) shall be measured according to 6.4.11 prior to testing in a panel from the same lot. When the moisture content of the specimens exceeds 12 percent, the specimens shall be conditioned to constant weight at 20 ± 3 °C (68 ± 6 °F) and 65 ± 5 percent relative humidity to achieve an equilibrium moisture content. Constant weight shall be assumed when two consecutive readings taken at least 24 hours apart agree within 0.2 percent.

6.4.8.3 Test procedure—Linear expansion specimens shall be placed in a flattening jig to remove any out-of-plane distortions, and the distance between gage points shall be measured to the nearest 0.025 mm (0.001 inch) with a bar-type trammel equipped with a dial gage. Thickness shall be measured along the edge to the nearest 0.025 mm (0.001 inch) with a dial gage micrometer, applying ratchet pressure during measuring.

Following these as-received measurements, unrestrained specimens shall be mounted within 30 degrees of vertical and shall be wetted on one side with water at 18 ± 6 °C (65 ± 10 °F). The period of continuous wetting shall be 14 days. No liquid water shall impinge on the back. The back shall be exposed to any humidity vapor present. All factory edges shall be exposed to water except the freshly cut edge. The cut edge shall be the top edge and protection with an edge sealer shall be permitted. After wet exposure the specimens shall be remeasured.

Expansion values shall be calculated to express results as a percentage of the original dimension, as given in the equation:

$$\text{Percent change} = \frac{L_w - L_d}{L_d} \times 100$$

where L_w = dimension wet
L_d = dimension dry.

6.4.9 Linear and thickness expansion measured by exposure to relative humidity

6.4.9.1 General—This method measures linear expansion in accordance with ASTM D-1037, Sections 107 to 110, Linear Variation with Change in Moisture Content.

Thickness expansion, where applicable, shall be measured as described in 6.4.9.2 and 6.4.9.3.

6.4.9.2 Specimen preparation—From each sample, two specimens shall be cut according to the procedures of ASTM D-1037, Sections 107 to 110. Test specimens shall be cut 75 mm wide by 1040 mm long (3 by 41 inches). Shorter lengths shall be permitted, but specimens shall not be less than 300 mm (12 inches) long. To serve as measuring points for linear expansion, brass eyelets shall be placed in pre-bored holes on the centerline of each specimen, 25 mm (1 inch) in from each end. This shall result in a nominal 990-mm (39-inch) gage distance.

Additionally, points shall be selected and marked on the centerline of the specimen 75 mm (3 inches) in from each end to serve as measuring points for thickness expansion.

6.4.9.3 Test procedure—The procedures of ASTM D-1037, Sections 107 to 110, shall be followed for linear expansion testing, except that specimens shall be placed in a flattening jig to remove any out-of-plane distortions, and the distance between gage points shall be measured to the nearest 0.025 mm (0.001 inch) with a bar-type trammel equipped with a dial gage. Thickness shall be measured to the nearest 0.025 mm (0.001 inch) with a dial gage micrometer, applying ratchet pressure during measuring.

Expansion values shall be calculated to express results as a percentage of the original "dry" dimension, as given in the equation:

$$\text{Percent change} = \frac{L_w - L_d}{L_d} \times 100$$

where L_w = dimension wet
L_d = dimension dry.

6.4.10 Panel stability index

6.4.10.1 General—This method produces an indication of a panel's threshold point for buckling when wet.

6.4.10.2 Specimen preparation—Following flexure testing of each 1220- by 1220-mm (48- by 48-inch) specimen (see 6.4.5), specimens shall be cut in each panel direction according to 6.4.7 for linear expansion from oven-dry to soak.

6.4.10.3 Test procedure—As an indication of the ability of the product to remain flat in service when applied according to the manufacturer's specifications, a stability index shall be calculated using the panel properties of stiffness and coefficient of linear expansion, as well as the intended span.

Flexural stiffness of each 1220- by 1220-mm (48- by 48-inch) specimen shall be determined in each panel direction by the procedures given in 6.4.5.

Linear expansion shall be measured from oven-dry to soak. The procedures given in 6.4.7 shall be followed.

The stability index for each direction of each specimen shall then be calculated as:

$$A = \log_{10} (\pi^2 EI/KL^2\varnothing)$$

where
A = stability index
EI = stiffness, N•mm²/m (lbf•in²/ft)
Ø = linear expansion, mm/mm (in/in) (percent expansion divided by 100)
K = unit adjustment factor, 14.6 (1.0 when values in formula are in customary units)
L = span, mm (in)

For the major panel axis, the span shall be the maximum span rating for which the panel is being qualified.

For the cross-panel direction, the span shall be the maximum interior nail spacing specified by the manufacturer.

6.4.11 Panel moisture content

6.4.11.1 General—This test procedure defines the method of determining panel moisture content by the oven-dry method according to the principles of ASTM D-4442.

6.4.11.2 Specimen preparation—From each panel a specimen shall be cut at least 50 mm (2 inches) from any edge using a 75-mm (3-inch) hole saw. If the panel size is less than 150 by 150 mm (6 by 6 inches) (by panel thickness), the entire panel shall be used.

6.4.11.3 Test procedure—The specimen weight shall be obtained (±0.2 percent) and the specimen placed in a drying oven at 103±2 °C (217±4 °F) until constant weight is achieved. Constant weight shall be assumed when two consecutive readings taken at least two hours apart agree within 0.2 percent.

The moisture content shall be calculated as:

$$M = [(W_w - W_d)/W_d]\ 100$$

where
M = Moisture content (percent)
W_w = Initial weight (grams or similar units)
W_d = Oven-dry weight (grams or similar units).

6.4.12 Panel thickness

6.4.12.1 General—This method defines the procedure for determining panel thickness.

6.4.12.2 Specimen preparation—The readings shall be taken on an as-received panel.

6.4.12.3 Test method—Measurements shall be taken to the nearest 0.025 mm (0.001 inch) using a micrometer with an anvil diameter of not less than 10 mm (0.40 inch) and not greater than 20 mm (0.79 inch). The micrometer shall apply a pressure of not less than 35 kPa (5 psi) or more than 69 kPa (10 psi) during measurement. For each panel, one thickness reading shall be taken mid-width on each panel edge such that the anvil does not touch the extreme edge.

The panel thickness shall be the average of four readings.

6.4.13 Probe test for delamination

6.4.13.1 General—This test procedure defines a method for the determination of delamination in composite panels.

6.4.13.2 Equipment—The probe used shall measure 6 mm (1/4 inch) wide at the tip by 0.3 mm (0.012 inch) thick and shall increase in thickness to about 0.6 mm (0.025 inch), 12 mm (1/2 inch) from the tip. The 6-mm (1/4-inch) width shall increase to a width of 16 mm (5/8 inch) at 25 mm (1 inch) from the end. The probe shall be of any convenient length. The tip of the probe shall be squared off and not sharp so that when probing delaminations, fibers across the delaminated area will not be cut.

6.4.13.3 Specimen preparation—Five specimens shall be cut from each sample to 25- by 125-mm (1- by 5-inch) dimensions, avoiding veneer defects when present, with grain of the outer plies in the long direction. Measurement of delamination shall take place prior to any mechanical test.

6.4.13.4 Test procedure—Delamination shall be evaluated according to the following procedure. The specimen shall be examined visually for delamination. Any separations in the specimen periphery in veneer-to-veneer or veneer-to-wood-based material glueline shall be probed to determine depth of delamination. A separation that is 6 mm (1/4 inch) deep for a continuous length of 25 mm (1 inch) shall be considered as having failed the test for delamination. Use of slight pressure is necessary when inserting the probe into the delaminated areas. The pressure shall be limited to that which is applied by gripping the probe between the thumb and first finger. In no case shall any prying action be used.

The number of specimens failing this test shall be reported.

6.4.14 Moisture cycle for performance testing

6.4.14.1 General—This accelerated moisture test cycle is intended as a measure of panel durability. Following the moisture cycle, structural performance tests are performed and results compared to performance criteria.

6.4.14.2 Specimen preparation—Specimen dimensions and the number required shall depend upon the performance test to be performed following exposure.

6.4.14.3 Test procedure—The weight of at least two specimens from each lot to be moisture cycled shall be determined to within ± 0.2 percent.

The specimens shall be placed in a rack in order to provide maximum exposure to moisture and drying. The specimens shall be submerged in water and maintained at 66 ± 3 °C (150 ± 5 °F) for 8 hours.

Following hot-water soaking, specimens shall be dried at 82 ± 5 °C (180 ± 10 °F) until panels are within 5 percent of their original, as-received weight.

Specimens shall be ready for performance testing when dry weight is achieved and following one-half hour cooling in ambient air.

6.4.15 Mold test

6.4.15.1 Equipment—Cabinets shall be used to house test specimens under mold-producing conditions. Each cabinet shall be divided into three interconnecting compartments with adjustable specimen trays, each with a sealed door in the front. On each side of the trays, toweling shall be suspended vertically with the lower ends in a water pan acting as wicking in order to provide maximum wet surface area. These pans shall rest on the floor of the mold cabinet under each compartment. The water level in these pans shall be kept 65 to 75 mm (2-1/2 to 3 inches) in depth.

In order to maintain a uniform temperature within the mold cabinets, a walk-in housing shall surround the cabinets. The temperature within this housing shall be maintained at 27 °C (80 °F) with a 500-watt heater controlled by a thermostat. Fan-forced air circulation sufficient to avoid stratification shall be used to insure even temperature in all areas of the housing. No air circulation shall occur within the mold cabinets since mold growth is dependent upon still air.

A uniform temperature shall be maintained in the housing around the cabinets.

6.4.15.2 Specimen preparation—Test specimens to be used for determination of mold resistance of the adhesive agent in the panel shall depend on the construction of the panels being tested. Panels consisting of all veneer shall be tested by preparing plywood shear specimens as described in PS 1, Section 6.4.1, kerfed to pull lathe checks closed for maximum breaking load.

Test specimens for testing veneered composite panels and mat-formed panels shall be 25 by 125 mm (1 by 5 inches) in dimension. Veneered composite panel specimens shall be cut with the veneer grain in the 125-mm (5-inch) dimension. Mat-formed panels shall be cut with the 125-mm

(5-inch) dimension parallel to the major panel axis, except in the case of panels containing oriented furnish, in which case two complete sets of specimens as described below shall be prepared, one set parallel and one set perpendicular to the major panel axis.

The four panels to be mold tested shall be cut into 100 pairs of specimens (two sets of 100 pairs each in the case of oriented furnish). These paired specimens (mold test specimen and adjacent control specimen) shall be completely randomized and assembled into 10 groups of 20 specimens each for each direction tested (10 test specimens and 10 controls). The controls and test specimens for each group shall then be separated.

6.4.15.3 Test procedure—Prior to placing all-veneer specimens in the mold cabinet, they and their controls shall be stickered, given a 5-second dip in tap water at room temperature, and then conditioned for one week at 90 to 97 percent relative humidity and a temperature of 27 °C (80 °F) in a separate conditioning chamber. After one week, test and control specimens shall be removed. Test specimens shall be dusted with soybean flour and placed flat on green pine sapwood veneer strips that have been stored in the mold cabinet. A stack of these veneer strips and test specimens shall then be placed in the mold cabinet. The control specimens shall be allowed to dry at room conditions.

At two-week intervals, the designated mold groupings shall be removed from the cabinet and allowed to dry at room conditions for one week. Test specimens and corresponding control specimens shall then be tested as required. Ten of these groups shall be sufficient to test mold-resistant properties of all-veneer products.

Mold test specimens for veneered composites and mat-formed products shall be subjected to the five-second dip in tap water and the one-week exposure at 90 to 97 percent relative humidity and a temperature of 27 °C (80 °F) in a separate humidity chamber.

Control test specimens from veneered composites and mat-formed products shall be subjected to testing according to 6.4.17. At two-week intervals, veneered composites and mat-formed products from the mold test and moisture-cycled control specimens shall be dried at room conditions for one week and then tested according to 6.4.6.

6.4.16 Bacteria test

6.4.16.1 General—This method determines if an adhesive system possesses sufficient resistance to bacterial attack to retain bond integrity under conditions which promote bacterial growth.

6.4.16.2 Specimen preparation—Test specimen size shall depend on panel construction. All-veneer panels shall use shear specimens described in Section 4.5.1 of PS 1, kerfed to pull lathe checks closed for maximum breaking load. Other panels shall use a specimen 25 by 125 mm (1 by 5 inches). Veneer-containing panels shall be cut with the 125-mm (5-inch) dimension parallel to the grain. The veneer shall be completely free of defects.

Specimens from mat-formed panels shall be cut parallel to the major panel axis, except for panels containing oriented furnish, in which case two complete sets of specimens shall be cut, one parallel and one perpendicular to the major panel axis.

Sufficient material is needed to provide 80 specimens per set as required. Specimens within each set shall be numbered consecutively 1 through 80 as cut, with odd-numbered specimens destined for bacteria exposure and the adjacent even-numbered specimens destined for control. Ten odd-numbered specimens and their matching ten even-numbered specimens shall then comprise an exposure group and control for that group. Four such groups shall be made up from the 80 specimens for each direction tested.

6.4.16.3 Test procedure—Specimens consisting only of veneer, including the controls, shall be subjected to one-half hour vacuum and one-half hour pressure under tap water following the cycle used in the PS 1 vacuum-pressure test for Exterior plywood. Control specimens shall then be tested as required in the wet condition. The breaking load shall be recorded and control averages shall be determined for each of the exposure groups.

For veneered composites and mat-formed products, all specimens shall be subjected to the vacuum-soak portion of the moisture cycle test of 6.4.17. Control specimens shall be dried according to the drying provisions of 6.4.17 and broken dry according to the procedures of 6.4.6 with the breaking load recorded and control averages determined for each of the exposure groups.

All specimens designated for the bacteria exposure shall be floated flat in a slurry of soybean flour, water and alder sawdust consisting of 7 percent soybean flour, 83 percent water and 10 percent alder sawdust (sawdust at 18 percent moisture content). To this slurry shall be added 0.3 percent by weight of a 50 percent solution of sodium hydroxide. The slurry shall be poured into trays, filling them to a depth of 25 mm (1 inch). **(Note: Do not use copper trays.)** These trays containing slurry and specimens shall then be placed into a cabinet described and maintained according to 6.4.15.

One exposure group shall be removed from the cabinet every three weeks over the twelve-week period of the test. All-veneer specimens shall be tested wet according to the standard plywood shear test method. Specimens of veneered composite and mat-formed products shall be dried according to the drying cycle of 6.4.17 and broken according to 6.4.6.

6.4.17 Moisture cycle for quality assurance (single cycle test)

6.4.17.1 General—This moisture cycle test is a quality control method to accelerate bond degradation. Following moisture cycling, a mechanical test is generally performed.

6.4.17.2 Specimen preparation—Specimen size and configuration shall depend upon the test to follow moisture cycling.

6.4.17.3 Test procedure—The specimens shall be placed in racks to insure free movement of water and air around the specimens. The specimens shall then be placed in a vacuum-pressure vessel which is then filled with 66 °C (150 °F) water. A vacuum of 50.6 kPa (15 inches of mercury) shall be drawn on the vessel for 30 minutes. The vacuum shall then be released and the specimens shall be allowed to soak in the water at atmospheric pressure for 30 minutes. The vessel shall then be drained and the specimens dried for 15 hours at 82 °C (180 °F) in an oven with fan-forced air circulation of 45 to 50 air changes per minute. The specimens shall then be tested dry according to the appropriate test method.

6.4.18 Moisture cycle for delamination and strength retention (six-cycle test)

6.4.18.1 General—This moisture cycle is used in evaluation of delamination and strength retention of products rated as Exposure 1.

6.4.18.2 Specimen preparation—Specimen size and configuration shall depend on the test to follow moisture cycling.

6.4.18.3 Test procedure—Specimens shall be placed in a rack such that they will remain separated throughout testing to insure proper drying. The racks shall then be placed in a pressure vessel and completely submerged in 66 °C (150 °F) water. A vacuum of 50.6 kPa (15 inches of mercury) shall be drawn, maintained for 30 minutes and released. Specimens shall then be allowed to soak in the same water at atmospheric pressure for 30 minutes with no additional heating. They shall afterwards be removed and dried for 6 hours at 82 °C (180 °F) in an oven with fan-forced air circulation of 45 to 50 air changes per minute. Specimens shall then be returned to the pressure vessel and the vacuum-soak cycle repeated. Following the second vacuum-soak cycle, specimens shall again be placed in the oven and dried for 15 hours. This shall complete two cycles. Testing shall be continued for two additional days until 6 cycles have been completed. The specimens are then tested dry according to the appropriate test method.

6.4.19 Bond durability associated with knots and knotholes

6.4.19.1 General—This is a moisture cycle and loading procedure for verifying resistance to deflection and damage under concentrated static and impact loads applied at the location of the maximum defect. The method is used to evaluate knots and knotholes greater than 51 mm (2 inches) but not exceeding 76 mm (3 inches) in width measured across the grain of Exposure 1 all-veneer panels.

6.4.19.2 Specimen preparation—From ten 1220- by 2440-mm (48- by 96-inch) panels, a specimen at least 595 mm (23.5 inches) wide by twice the span in length shall be cut. The test specimen shall be configured such that the subject knot or knothole is along a mid-test-span line and at least 295 mm (11-5/8 inches) from either edge. The subject knot shall be the maximum size (+0, −12 mm [+0, −1/2 inch]) permitted within the grade.

Each specimen shall be placed vertically in a tank and sprayed with water on both faces continuously for 72 hours. As an alternative to spraying, soaking panels continuously for 72 hours shall be permitted provided the height of the water level above the

panels does not exceed 600 mm (24 inches). Panels shall then be redried until constant weight is reached at 20 ± 3 °C (68 ± 6 °F) and 65 ± 3 percent relative humidity.

6.4.19.3 Test procedure

Concentrated static load—Procedures of ASTM E-661 and 6.4.1 of this Standard shall be followed except that:

1. The specimen shall be placed in the test frame with the subject knot or knothole in the tension zone when a bending load is applied.
2. The load shall be applied over the subject knot or knothole on the face opposite the knot or knothole.

Concentrated impact load—Procedures of ASTM E-661 and 6.4.1 of this Standard shall be followed, except that:

1. The specimen shall be placed in the test frame with the subject knot or knothole in tension.
2. The impact shot bag shall be dropped once from a height of 760 mm (30 inches).
3. The shot bag shall be dropped over the subject knot or knothole on the face opposite the knot or knothole.

6.4.20 Radial probe test

6.4.20.1 General—This method defines a procedure for determining delamination associated with knots and knotholes in all-veneer panels.

6.4.20.2 Equipment—The probe used shall measure 6 mm (1/4 inch) wide at the tip by 0.3 mm (0.012 inch) thick and shall increase in thickness to about 0.6 mm (0.025 inch), 12 mm (1/2 inch) from the tip. The 6 mm (1/4 inch) width shall increase to a width of 16 mm (5/8 inch) at 25 mm (1 inch) from the tip. The probe is to be of any convenient length. The tip of the probe shall be squared off and not sharp so that when probing delaminations, fibers across the delaminated area will not be cut. In addition, the probe shall be fitted with a mechanism that is capable of limiting the force to the maximum level specified.

6.4.20.3 Specimen preparation—One knot or knothole per sample panel shall be selected. The knot or knothole selected shall be the maximum size (+0, −13 mm [+0, −1/2 inch]) permitted within the grade. Each specimen shall be cut 300 by 300 mm (12 by 12 inches) with the knot or knothole approximately centered.

Specimens shall be moisture cycled and redried according to one of the following three cycles:

1. The 72-hour water spray cycle specified in 6.4.19. After exposure, specimens shall be redried until constant weight is reached at 20 ± 3 °C (68 ± 6 °F) and 65 ± 3 percent relative humidity.
2. The 72-hour water soak cycle specified in 6.4.19 (as an alternative to the 72-hour water spray cycle). After exposure, specimens shall be redried until constant weight is reached at 20 ± 3 °C (68 ± 6 °F) and 65 ± 3 percent relative humidity.
3. Specimens shall be placed in a pressure cylinder, flooded with water at 49 ± 6 °C (120 ± 10 °F) and subjected to a vacuum of 91 ± 7 kPa (27 ± 2 inches of mercury) for 3 hours. Specimens shall then be subjected to 3 hours of pressure not to exceed 414 kPa (60 psi). This shall be followed by a second vacuum exposure of 91 ± 7 kPa (27 ± 2 inches of mercury) for 2 hours. After exposure, the specimens shall be redried until constant weight is reached at 20 ± 3 °C (68 ± 6 °F) and 65 ± 3 percent relative humidity.

6.4.20.4 Test procedure—Each specimen shall be cut into 8 sectors with radii intersecting at center of knot or knothole. The area surrounding the knot or knothole shall be visually inspected for delamination. Where separations are visible, the probe shall be inserted with a force of 35.5 ± 4.5 N (8 ± 1 lbf). No prying action or lateral movement shall be applied.

For each sector the radial distance from the tip of the sector to the boundary of separation beyond the knot or knothole shall be measured along both edges of the sector and recorded. Where a separation is not found, the distance from the tip of the sector to the boundary of the knot or knothole shall be measured and recorded.

The total area of separation for each specimen shall be calculated as:

$$A = \pi R^2$$

where

A = total area of separation (mm^2 or in^2)
R = average radius of separation, calculated as the average of 16 distances (measured at edges of sectors) from the tips of the sectors to either the boundary of separation or the boundary of the knot or knothole (mm or in).

7. TRADEMARKING AND CERTIFICATION

7.1 Certification of shipments—In order to ensure that the purchaser has received structural-use panels of the grade and quality specified, the producer shall include with each shipment a "Certificate of Inspection" which states that the panels conform to this Standard. Each panel certified as being in conformance with this Standard shall bear the stamp of a qualified inspection and testing agency which (1) either inspects the manufacture (with adequate sampling, testing and examination for quality) or which (2) has tested a randomized sampling of the finished panels in the shipment being certified for conformance with this Standard.

7.1.1 Qualified inspection and testing agency—A qualified inspection and testing agency is defined to be one that:

(a) has the facilities and trained technical personnel to verify that the grading, measuring, species, construction, sanding, bonding, workmanship, and other characteristics of the products as determined by inspection, sampling and testing conform to all of the applicable requirements specified herein;
(b) has developed procedures to be followed by agency personnel in performance of inspection and testing;
(c) has no financial interest in, or is not financially dependent upon, any single company manufacturing the product being inspected or tested; and
(d) is not owned, operated or controlled by any such company.

7.2 Panel marking—All Sheathing, Structural I Sheathing and Single Floor panels represented as conforming to this Standard shall be identified with a mark bearing the grade name appropriate under these specifications, or a mark of a qualified inspection and testing agency. If identified by such a mark, the product specification shall be available from the qualified inspection and testing agency whose mark appears on the panel. The manufactured nominal thickness, span rating, exposure durability classification and the symbol PS 2-92 signifying conformance to this Standard shall be included in the trademark. Any supplemental application specifications of the manufacturer shall be clearly marked on each panel.

7.2.1 Voiding marks—Panels originally marked as conforming to this Standard but subsequently rejected as not conforming thereto shall have any reference to the Standard voided or obliterated by the manufacturer as follows:

Such panels shall be plainly marked by means of a 100- by 125-mm (4- by 5-inch) minimum size rectangular stamp carrying the legend, "Shop-cutting panel—all other marks void." (See definition of shop-cutting panel.)

No reference shall be made to this Standard in the certification or trademarking of panels not conforming to all of the applicable provisions of this Standard.

8. EFFECTIVE DATE AND IDENTIFICATION

This Standard became effective on approval, August 27, 1992. As of that date, reference to this Standard is permitted in contracts, codes, advertising, invoices, product labels, and the like; however, a product shall not be advertised nor represented in any manner that in any way might imply approval or endorsement of that product by the National Institute of Standards and Technology and/or the U.S. Department of Commerce.

The following suggested statements are permitted in representing products as conforming to the requirements of this Standard:

- "This _____ conforms to all requirements established in Voluntary Product Standard PS 2-92, 'Performance Standard for Wood-Based Structural-Use Panels,' in accordance with the U.S. Department of Commerce Procedures for the Development of Voluntary Product Standards. Full responsibility for the conformance of this product to the Standard is assumed by (name and address of producer and/or distributor)."
- "Conforms to Voluntary Product Standard PS 2-92, (name and address of producer and/or distributor)."

9. HISTORY OF PROJECT

In September 1988, a special Binational Committee (BNC) was formed and charged with the task of fostering the mutual objective of the United States and Canada with respect to the development and implementation of harmonized standards with regard to performance requirements for plywood. This action was a consequence of the implementation of the Free Trade Agreement (FTA) of 1987. In accordance with the Agreement, U.S. tariffs on plywood and other structural panels could not be removed until the trade issues involving plywood standards were resolved. Of concern to the United States was the fact that certain grades of plywood permitted in PS 1 were not covered in Canadian plywood standards and consequently, not acceptable under Canadian building codes.

The BNC began its task by reviewing the existing industry standard of the American Plywood Association (APA), APA PRP-108, *Performance Standards and Policies for Structural-Use Panels,* and the Canadian Standards Association (CSA) standard series, CAN/CSA-O325, *Construction Sheathing,* to identify the technical differences and to consider the roles the standards might play in resolving the plywood trade issues. It concluded that the development of common criteria embodied in performance-based national standards offered a means to resolve the trade issue.

Next, the BNC sponsored a joint U.S./Canadian study designed to produce additional comparative information on U.S. and Canadian plywood. Based on BNC's assessment of the technical differences in the APA and CSA standards and the data derived from the joint study, the BNC in November 1990 submitted new U.S. and Canadian draft standards, respectively, to the National Institute of Standards and Technology (NIST) in the United States and the CSA in Canada for processing as national consensus standards.

In March 1991, the APA signed an agreement with NIST to support development of the proposed U.S. performance standard as a Voluntary Product Standard (VPS) under procedures of the U.S. Department of Commerce. In April 1991, NIST established a Standard Review Committee under the VPS Program to assume responsibility for development of the U.S. standard. On October 15, 1991, after two 30-day review periods and some editorial changes, the Committee recommended unanimously that the proposed standard be prepared for public review and acceptance as a Voluntary Product Standard.

In March 1992, the proposed VPS standard was distributed to a list of manufacturers, distributors, consumers and others who might have interest in the subject standard, and on April 8, 1992, NIST announced in the Federal Register the public circulation of the proposed standard and invited public comments. A 75-day comment period was allowed. Following public review of the standard, which ended June 22, 1992, NIST determined that the responses indicated consensus among producers, distributors and consumers in accordance with the published procedures. The standard was approved for publication by NIST as Voluntary Product Standard PS 2-92, *Performance Standard for Wood-Based Structural-Use Panels,* on August 27, 1992.

The new U.S. standard is not intended to replace existing standards such as Voluntary Product Standard PS 1-83, *Construction and Industrial Plywood,* but to serve as an alternative performance-based standard that would relate to a variety of forms of structural panels: plywood, waferboard, oriented strand board, structural particleboard, and composite panels.

10. STANDING COMMITTEE

A Standing Committee has been appointed to assist in keeping this Standard current. The names of the members of the Committee are available from the Secretariat for this Committee: the Standards Management Program, Office of Standards Services, National Institute of Standards and Technology, Gaithersburg, Maryland 20899.

APPENDIX A

A1. SHIPMENT REINSPECTION PRACTICES

A1.1 General—This information is based on industry practice and is offered to structural-use panel purchasers.

A1.2 Request for reinspection—Any request by the buyer for the reinspection of any item or lot of panels certified as conforming to this Standard shall be directed to the seller. Lacking agreement of the buyer and seller as to the settlement of a complaint, the purchase, sale or shipment of panels certified as conforming to this Standard shall be construed as involving agreement to submit such panels to re-inspection by the qualified inspection and testing agency whose trademark was used.

A1.3 Responsibility of the buyer—A request to the seller for reinspection is permitted:

(a) for panel grade—within 30 days[6] after arrival at the first point of receipt from the mill, if the grade of any item, as invoiced, is in doubt;
(b) for glue bond quality of Exterior panels—when delamination is visibly evident;
(c) for bond quality and bond durability associated with knots and knotholes of Exposure 1 and Exposure 2 panels—within 6 months after arrival at first point of receipt from the mill, if delamination is visibly evident;
(d) for structural performance, such as resistance to concentrated loads on panels—within 6 months after arrival at first point of receipt from the mill;
(e) for physical properties, such as linear expansion of panels—within 6 months after arrival at first point of receipt from the mill.

All panels of disputed grade shall be kept intact and properly protected from damage, deterioration and from direct exposure to moisture which could interfere with a fair reinspection.

All panels of disputed quality shall be held for a period not to exceed 30 days after the date of request for reinspection. Use by the buyer of any or all of the disputed stock within the 30-day period shall constitute an acceptance of the used portion.

[6] For unitized shipments, the 30-day limit shall be extended to include the period dating from receipt of shipment to breaking of the first bundle, but not exceeding 6 months, provided the requirement for keeping the disputed panels intact is observed and the panels in question are held for at least 30 days following the request for reinspection.

A1.4 Responsibility of the seller—A request for reinspection shall be promptly acknowledged by the seller following its receipt.

A1.5 Cost and assistance—The expense of reinspection shall be borne by the seller if the item, lot or shipment in dispute fails to pass the reinspection as provided for in A1.6. If the panels pass the reinspection, said expenses shall be borne by the buyer. The buyer shall lend all reasonable assistance to facilitate the reinspection.

A1.6 Reinspection procedures and settlement

A1.6.1 Condition of panels—All panels designated as complying with this Standard shall be subject to reinspection in the "white" (unfinished) only. This requirement does not apply to reinspections for bond quality.

A1.6.2 Sampling for panel grade, size and thickness reinspections—At buyer's or seller's option, grade, size and thickness reinspections may include all panels of an item whose conformance to this Standard is in dispute. However, buyer and seller may agree upon a reduced basis for sampling provided at least 20 percent or 300 panels, whichever is smaller and which represents only those items as invoiced which are in dispute, are reinspected for conformance. For reduced sampling, the quantity of panels selected from each disputed item shall be prorated according to the number of panels included in each item as invoiced. Panels found to be below grade or out of tolerance for size and thickness shall have improper trademarks obliterated and shall be re-marked with appropriate designation with a special inspection mark registered by the qualified agency conducting the reinspection and applied by that agency's authorized representative.

A1.6.3 Panel grade, size and thickness reinspections—If reinspection establishes that a disputed item is more than 5 percent below grade or out of dimensional tolerance for the product description as invoiced, that item fails to pass the reinspection. The nonconforming panels need not be accepted; however, all other panels shall be accepted as invoiced. If reinspection establishes that a disputed item is 5 percent or less below grade or out of dimensional tolerance, it passes the reinspection and the buyer shall pay for that item as invoiced. In addition to the above 5 percent grade and dimensional tolerance, a 5 percent tolerance shall apply separately to the inner ply gap limitations, including the limitations applicable to plugged crossbands and jointed crossbands, as set forth in 3.8.1. of PS 1.

A1.6.4 Sampling for bond quality, bond durability associated with knots and knotholes, structural performance or physical properties reinspections—For test purposes, 20 panels, or 5 percent of the panels, whichever is less, shall be selected at random from the item, lot or shipment which is in dispute. The number of panels required shall be calculated by applying the "percent panels" to the lot size and converting part panels to whole panels by using a rounding procedure where 0.01 to 0.49 parts are considered to be the smaller whole number, while 0.50 to 0.99 parts are considered to be the larger whole number. These panels shall be selected from locations distributed as widely as practicable throughout the material being sampled. When an item, lot or shipment involves panels with different bond requirements, testing and evaluation shall apply separately to each category.

A1.6.5 Bond quality reinspections—Reinspection of the unused panels in the disputed item, lot or shipment shall be carried out following the procedures set forth in 6.4 and A1.6.4 above. If the reinspection tests establish that the glue bond quality does not meet the requirements of 6.2.4 as applicable, the item, lot or shipment fails to pass the reinspection and may be rejected by the buyer. If the glue bond quality requirements are met, the item, lot or shipment passes the reinspection, and the buyer shall accept the item, lot or shipment as invoiced, except that the buyer need not accept any delaminated Exterior panels.

A1.6.6 Reinspection for bond durability associated with knots and knotholes—Unless otherwise agreed upon between buyer and seller, reinspections for bond durability associated with knots and knotholes shall be limited to knots and knotholes greater than 50 mm (2 inches) but not exceeding 76 mm (3 inches) in width measured across the grain. Knots and knotholes within this range shall be reinspected according to 6.4.19 and 6.4.20. If the panels were not exposed to weather prior to reinspection sampling, they shall be moisture conditioned according to the cycle specified in 6.4.19 and 6.4.20 prior to reinspection.

If reinspection tests establish that the bond durability associated with knots and knotholes requirements are not met, the item, lot or shipment fails to pass the reinspection and may be rejected by the buyer. If the reinspection requirements are met, the item, lot or shipment passes the reinspection and the buyer must accept the item, lot or shipment as invoiced.

A1.6.7 Structural performance reinspections—Unless otherwise agreed upon between buyer and seller, structural performance reinspections are limited to concentrated loads (5.5.1.1). If the buyer and seller agree to additional tests, a larger number of panels than those given in A1.6.4 may be needed. If the reinspection tests establish that the concentrated load requirements are not met, the item, lot or shipment fails to pass the reinspection and may be rejected by the buyer. If the concentrated load requirements are met, the item, lot or shipment passes the reinspection and the buyer must accept the item, lot or shipment as invoiced.

A1.6.8 Physical property reinspections—Unless otherwise agreed upon between buyer and seller, physical property reinspections shall be limited to linear expansion (5.5.2.1). If the reinspection tests establish that the linear expansion requirements are not met, the item, lot or shipment fails to pass the reinspection and may be rejected by the buyer. If the linear expansion requirements are met, the item, lot or shipment passes the reinspection and the buyer must accept the item, lot or shipment as invoiced.

*U.S. G.P.O.:1992-341-832:60379